FIRST ANGLE PROJECTION (ALL DIMENSIONS ARE IN mm)

THE INFORMATION ON THIS DOCUMENT IS THE PROPERTY OF BHARAT HEAVY ELECTRICALS LIMITED. IT MUST NOT BE USED DIRECTLY OR INDIRECTLY IN ANY WAY DETRIMENTAL TO THE INTEREST OF THE COMPANY

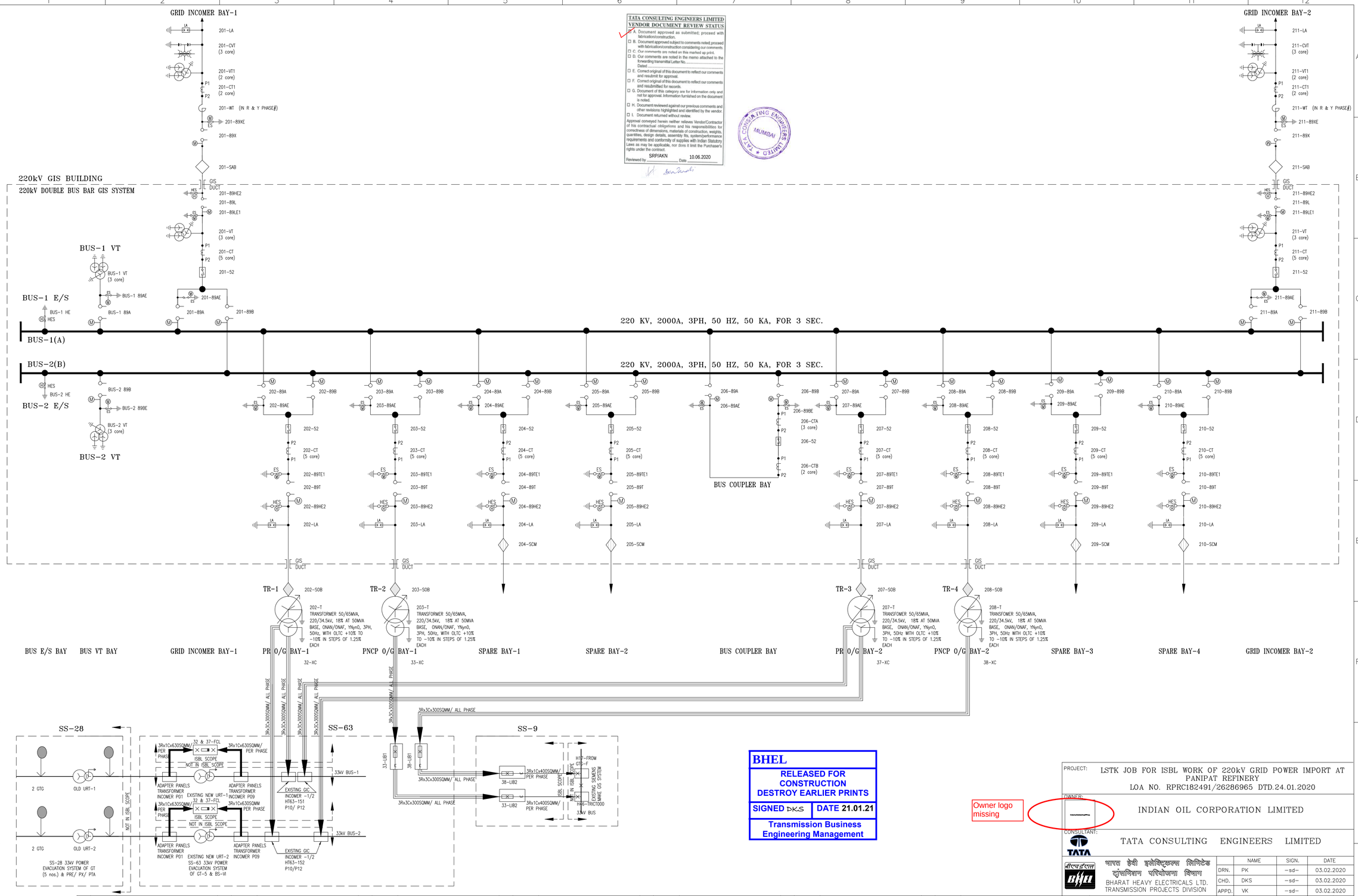

TATA CONSULTING ENGINEERS LIMITED
VENDOR DOCUMENT REVIEW STATUS

- ☑ A. Document approved as submitted; proceed with fabrication/construction.
- ☐ B. Document approved subject to comments noted; proceed with fabrication/construction considering our comments.
- ☐ C. Our comments are noted on this marked up print.
- ☐ D. Our comments are noted in the memo attached to the forwarding transmittal Letter No. _____ Dated _____
- ☐ E. Correct original of this document to reflect our comments and resubmit for approval.
- ☐ F. Correct original of this document to reflect our comments and resubmitted for records.
- ☐ G. Document of this category are for information only and not for approval. Information furnished on the document is noted.
- ☐ H. Document reviewed against our previous comments and other revisions highlighted and identified by the vendor.
- ☐ I. Document returned without review.

Approval conveyed herein neither relieves Vendor/Contractor of his contractual obligations and his responsibilities for correctness of dimensions, materials of construction, weights, quantities, design details, assembly fits, system/performance requirements and conformity of supplies with Indian Statutory Laws as may be applicable, nor does it limit the Purchaser's rights under the contract.

Reviewed by SRP/AKN Date 10.06.2020

TATA CONSULTING ENGINEERS LIMITED MUMBAI

BHEL
RELEASED FOR CONSTRUCTION
DESTROY EARLIER PRINTS
SIGNED DKS | DATE 21.01.21
Transmission Business Engineering Management

Owner logo missing

PROJECT: LSTK JOB FOR ISBL WORK OF 220kV GRID POWER IMPORT AT PANIPAT REFINERY
LOA NO. RPRC182491/26286965 DTD.24.01.2020

OWNER: INDIAN OIL CORPORATION LIMITED

CONSULTANT: TATA CONSULTING ENGINEERS LIMITED

भारत हैवी इलेक्ट्रिकल्स लिमिटेड
ट्रांसमिशन परियोजना विभाग
BHARAT HEAVY ELECTRICALS LTD.
TRANSMISSION PROJECTS DIVISION

	NAME	SIGN.	DATE
DRN.	PK	–sd–	03.02.2020
CHD.	DKS	–sd–	03.02.2020
APPD.	VK	–sd–	03.02.2020

DEPT. TBEM CODE 411	UNTOL. DIMS. GR. ~~C/M/F~~	SCALE –N.A.–	WEIGHT (KG) –N.A.–	REF. TO ASSY. DRG. –N.A.–	ITEM NO. –N.A.–	NO.OF ITEMS –N.A.–

TITLE: 220/33KV SWITCHYARD–SINGLE LINE DIAGRAM

DRAWING/ DOCUMENT NO. TB–411–510–001 REV. 05

SHT. No 01 NO. OF SHT. 03

REV.	DATE	ALTERED / CHECKED / APPROVED	ZONE
05	10.06.20		AS PER TCE/IOCL COMMENTS DTD.09.05.2020 & 09.05.2020.
04	07.05.20		AS PER TCE/IOCL COMMENTS DTD.30.04.2020 & 06.05.2020.
03	27.04.20		AS PER TCE/IOCL COMMENTS DTD.23.04.2020 & 22.04.2020.
02	22.04.20	ALTERED PK; CHECKED DKS; APPROVED VK	AS PER TCE/IOCL COMMENTS DTD. 30.03.2020 & 22.04.2020
01	14.02.20	ALTERED PK; CHECKED DKS; APPROVED VK	AS PER HVPNL/IOCL COMMENTS ON DTD. 13.02.2020 IN HVPNL OFFICE.

COMPUTER FILE NAME | REF. DRG. NO. | SIGN. AND DATE | INVENTORY NO

SIZE–A1

FIRST ANGLE PROJECTION (ALL DIMENSIONS ARE IN mm)

THE INFORMATION ON THIS DOCUMENT IS THE PROPERTY OF BHARAT HEAVY ELECTRICALS LIMITED. IT MUST NOT BE USED DIRECTLY OR INDIRECTLY IN ANY WAY DETRIMENTAL TO THE INTEREST OF THE COMPANY

A. 220kV OUTDOOR EQUIPMENT

SL.NO.	DESCRIPTION	SYMBOL	LEGEND	BAY NO/LOCATION	UNIT	QTY
1.	198kV, 10kA, CLASS-III, 1 PHASE SURGE ARRESTER (SA)/ LIGHTNING ARRESTER (LA)		LA	201, 211.	NO	06
2.	220kV, 8800pF, 1 PHASE CAPACITOR VOLTAGE TRANSFORMER (CVT), (220/ √3kV)/(110/ √3V)/(110/ √3V)/(110/ √3V)		CVT	201, 211.	NO	06
3.	220kV, 1250A, 1mH, 31.5kA/1s, 1 PHASE WAVE TRAP		WT	201, 211.	NO	04
4.	220kV, 1 PHASE TARIFF METERING PT		PT1	201, 211.	NO	06
5.	220kV, 1 PHASE TARIFF METERING CT		CT1	201, 211.	NO	06
6.	220kV, 2000A, 1X3 PHASE, HCB ISOLATOR (ELECTRICALLY OPERATED MECHANICALLY GANGED) WITH ONE EARTH SWITCH (ELECTRICALLY OPERATED MECHANICALLY GANGED)		89X	201, 211.	SET	02

B. 220kV INDOOR GIS

SL.NO.	DESCRIPTION	SYMBOL	LEGEND	BAY NO/LOCATION	UNIT	QTY
1.	220kV, 2000A, 1X3 PHASE CIRCUIT BREAKER		52	201, 202, 203, 204, 205, 206, 207, 208, 209, 210, 211.	SET	11
2.	220kV, 2000A, 1X3 PHASE DISCONNECTING SWITCH WITHOUT EARTH SWITCH		89B	201, 202, 203, 204, 205, 207, 208, 209, 210, 211.	SET	10
3.	220kV, 2000A, 1X3 PHASE DISCONNECTING SWITCH WITH SINGLE EARTH SWITCH		89A, 89AE 89B, 89BE 89L, 89LE1 89T, 89TE1	BUS-1, BUS-2 201, 202, 203, 204, 205, 206, 207, 208, 209, 210, 211.	SET	24
4.	220kV, 2000A, 1X3 PHASE HIGH SPEED/ FAST EARTHING SWITCH		89HE2	BUS-1, BUS-2 201, 202, 203, 204, 205, 206, 207, 208, 209, 210, 211.	SET	12
5.	198kV, 10kA, CLASS-III, 1 PHASE SURGE ARRESTER		LA	202, 203, 204, 205, 207, 208, 209, 210.	NO	24
6.	220kV, 1 PHASE CURRENT TRANSFORMER		CT	201, 202, 203, 204, 205, 206, 207, 208, 209, 210, 211.	NO	33
7.	220kV, 1 PHASE VOLTAGE TRANSFORMER		VT	BUS-1, BUS-2, 201, 211	NO	12
8.	220kV, 1 PHASE SF6 TO AIR BUSHING		SAB	201, 211.	NO	06
9.	220kV, 1 PHASE SF6 TO OIL BUSHING		SOB	202, 203, 207, 208.	NO	12
10.	220kV, 1 PHASE SF6 TO CABLE MODULE		SCM	204, 205, 209, 210.	NO	12
11.	220kV, 1 PHASE GIS BUS DUCT		--	201, 202, 203, 204, 205, 206, 207, 208, 209, 210, 211.	LOT	01

C. 33kV OUTDOOR EQUIPMENT INCLUDING 220/33KV POWER TRANSFORMER

SL.NO.	DESCRIPTION	SYMBOL	LEGEND	BAY NO/LOCATION	UNIT	QTY
1.	TRANSFORMER 50/65MVA, 220/34.5KV, 18% AT 50MVA BASE, ONAN/ONAF, YNYN0, 3PH, 50HZ, WITH OLTC +10% TO -10% IN STEPS OF 1.25% EACH		TR	202/32, 203/33, 207/37, 208/38.	NO	04
2.	33KV AIS LIB PANEL		LIB1, LIB2	33, 38.	SET	04
3.	33KV FAULT CURRENT LIMITER PANEL		FCL	33KV BUS-1, 33KV BUS-2	SET	02
4.	33kV(E), 3CX300SQMM, CU, XLPE, ARMORED CABLE INCLUDING END TERMINATION AND STRAIGHT THROUGH JOINTS		--	32, 33, 37, 38.	LOT	01
5.	33kV(E), 1CX400SQMM, CU, XLPE, ARMORED CABLE INCLUDING END TERMINATION AND STRAIGHT THROUGH JOINTS		--	33, 38.	LOT	01
6.	33kV(E), 1CX630SQMM, CU, XLPE, ARMORED CABLE INCLUDING END TERMINATION AND STRAIGHT THROUGH JOINTS		--	33KV BUS-1, 33KV BUS-2	LOT	01

SYSTEM PARAMETERS –

SL. NO.	DATA	220kV SYSTEM	33kV SYSTEM
01	NOMINAL VOLTAGE (kV)	220kV±10%	33kV±6%
02	FREQUENCY (Hz)	50±5%	50±3%
03	SYSTEM EARTHING	SOLIDLY EARTHED	SOLIDLY EARTHED
04	SHORT-TIME CURRENT RATING (kA/Sec)	50kA/3sec	31.5kA/1sec
05	RATED PEAK WITHSTAND CURRENT (kAp)	125	80
06	BASIC INSULATION LEVEL (kVP)	1050	170
07	RATED CURRENT AT 50°C (A)	2000	2500
08	RATED POWER FREQUENCY WITHSTAND VOLTAGE DRY/WET (kVrms)	460	70
09	LIGHTNING IMPULSE WITHSTAND VOLTAGE (KVp)	1050	170
10	CREEPAGE DISTANCE (mm/kV)	25	25
11	MINIMUM AMBIENT TEMPERATURE (°C)	-5°C	-5°C
12	MAXIMUM AMBIENT TEMPERATURE (°C)	+50.0°C	+50.0°C
13	EQUIPMENT DESIGN TEMPERATURE (°C)	+45.0°C	+45.0°C
14	AUXILIARY SUPPLY VOLTAGE (Vac)	415V,3 PHASE/ 240V,1 PHASE	415V,3 PHASE/ 240V,1 PHASE
15	PROETCTION & CONTROL SUPPLY (Vdc) 1. TRIP COIL SUPPLY 2. CLOSE COIL SUPPLY 3. SPRING CHARGING MOTOR SUPPLY	 220 ±5% 220 -70% +110% 220 -80% +110% 220 -80% +110%	 220 ±5% 220 -70% +110% 220 -80% +110% 220 -80% +110%

NOTES: –

1. BAY SEQUENCE FOR GIS TENTATIVE AND MAY CHANGE IN LINE WITH THE REQUIREMENTS OF SERVICE CONTINUITY AND STANDARD DESIGN OF OEM.
2. COMMON TARIFF METERING ROOM (1NO) SHALL BE PROVIDED FOR BOTH INCOMER BAYS.
3. LOCATION OF GIS CT IN BAY MAY CHANGE AS PER OEM RECOMMENDATIONS.
4. THE CABLE MODULE IN THE GIS SPARE OUTGOING BAYS, SUITABLE FOR CABLE TERMINATIONS SHALL BE BE PROVIDED FULLY EQUIPPED FOR CABLE TERMINATION WITH AVAILABILITY OF FEMALE CONTACT CONTACTS.
5. FOR INDIVIDUAL EQUIPMENT OF GIS & AIS SHALL BE IN LINE WITH TECHNICAL SPECIFICATION. DEVIATION IF ANY SHALL BE TAKEN UP SEPARATELY.
6. TRANSFORMER DETAILS SHALL BE UPDATED AS PER MANUFACTURE'S DRAWINGS.
7. CT/ VT PARAMETERS SHALL BE DETAILED IN SEPARATE DRAWING (DRG. NO. TB-411-510-002 220/33kV SWITCHYARD- KEY METERING & PROTECTION SINGLE LINE DIAGRAM).
8. SCHEDULE OF EQUIPMENT COVERS ONLY HV/ EHV EQUIPMENT FOR POWER FLOW. THE DETAILS OF OTHER AUXILIARY EQUIPMENT SHALL BE COVERED ON OTHER DRAWING/ DOCUMENTS, TO BE COVERED SEPARATELY.
9. THE DETAILS OF PANELS/ EQUIPMENT UNDER CUSTOMER SCOPE MAY CHANGE AS LATER STAGE.
10. 33kV GIC INCOMER PANELS/ ADAPTER PANELS IN SS-63 AND 33kV GIS PANELS IN SS-9 SHAL BE IN CUSTOMER SCOPE, HOWEVER TERMINATION OF 33kV XLPE CABLES SHALL BE DONE BY BHEL.
11. THE DETAILS OF 33kV XLPE CABLES AND ACCESSORIES ARE TENTATIVE AND ARE BASED ON INITIAL SITE SURVEY, IN CASE OF ADDITIONAL REQUIREMENT, SAME SHALL SUPPLIED AND EXECUTED BY BHEL ONLY.
12. LINE TRAP SHALL BE SUSPENSION TYPE ONLY, WHICH SHALL BE SUSPENDED FROM GANTRY/ BEAM.

REFERENCE DRAWING (S)/ DOCUMENT(S) –

SL. NO.	DRAWING/ DOCUMENT NO.	DRAWING TITLE
3.	ANNEXURE-7P	220kV GIS- SLD
2.	ANNEXURE-S-2/C-1/5	INTERCONNECTION SLD FOR PR
1.	ANNEXURE-S-2/C-1/6	INTERCONNECTION SLD FOR PNCP POWER EVACUATION FACILITY

PROJECT: LSTK JOB FOR ISBL WORK OF 220kV GRID POWER IMPORT AT PANIPAT REFINERY
LOA NO. RPRC182491/26286965 DTD.24.01.2020

OWNER: INDIAN OIL CORPORATION LIMITED

CONSULTANT: TATA CONSULTING ENGINEERS LIMITED

भारत हेवी इलेक्ट्रिकल्स लिमिटेड
ट्रांसमिशन परियोजना विभाग
BHARAT HEAVY ELECTRICALS LTD.
TRANSMISSION PROJECTS DIVISION

	NAME	SIGN.	DATE
DRN.	PK	-sd-	03.02.2020
CHD.	DKS	-sd-	03.02.2020
APPD.	VK	-sd-	03.02.2020

REV.	DATE	ALTERED	REV.	DATE	ALTERED	REV.	DATE	ALTERED	REV.	DATE	ALTERED	REV.	DATE	ALTERED	REV.	DATE	ALTERED
		CHEDCKED			CHEDCKED	05	10.06.20	CHEDCKED	04	07.05.20	CHEDCKED	03	27.04.20	CHEDCKED	02	22.04.20	CHEDCKED DKS
		APPROVED			APPROVED			APPROVED			APPROVED			APPROVED			APPROVED VK
ZONE			ZONE			ZONE		AS PER TCE/IOCL COMMENTS DTD.09.05.2020 & 09.05.2020.	ZONE		AS PER TCE/IOCL COMMENTS DTD.30.04.2020 & 06.05.2020.	ZONE		AS PER TCE/IOCL COMMENTS DTD.23.04.2020 & 22.04.2020.	ZONE		AS PER TCE/IOCL COMMENTS DTD. 30.03.2020 & 22.04.2020

REV.	DATE	ALTERED	REV.	DATE	ALTERED
		CHECKED			CHECKED DKS
		APPROVED			APPROVED VK
ZONE		AS PER HVPNL/IOCL COMMENTS ON DTD. 13.02.2020 IN HVPNL OFFICE.			

DEPT. TBEM CODE. 411	UNTOL. DIMS. GR. ~~C/M/F~~	SCALE -N.A.-	WEIGHT (KG) -N.A.-	REF. TO ASSY. DRG. -N.A.-	ITEM NO. -N.A.-	NO.OF ITEMS -N.A.-

TITLE: 220/33KV SWITCHYARD-SINGLE LINE DIAGRAM

DRAWING/ DOCUMENT NO. TB-411-510-001 REV. 05

SHT. No 02 NO. OF SHT. 03

COMPUTER FILE NAME | REF. DRG. NO. | SIGN. AND DATE | INVENTORY NO

SIZE-A1

FIRST ANGLE PROJECTION (ALL DIMENSIONS ARE IN mm)

THE INFORMATION ON THIS DOCUMENT IS THE PROPERTY OF BHARAT HEAVY ELECTRICALS LIMITED. IT MUST NOT BE USED DIRECTLY OR INDIRECTLY IN ANY WAY DETRIMENTAL TO THE INTEREST OF THE COMPANY

D. 33kV XLPE CABLE AND ACCESSORIES

Sl. No.	33/19kV Cu Cable, minimum sizing for the complete project shall be considered as stated below,	Termination Details		Cable Details		Cable Length Details						Termination Details (For 3C cables, 1set= 3Phase Terminations, and 1C cables, 1no=1 phase termination)							Clamp Details		Remarks
		From	To	No. of Core (s)	Cable Size (In sqmm)	No. of Runs/ (Phase/ All Phase)	No. of Runs/ Feeder	No. of Feeder	Total No. of Runs	Route Length (In mtrs)	Total Cable Length (In meters)	No. of 220/34.5kV Power Transformer End Termination(s)	No. of 33kV LIB End Termination(s)	No. of 33kV GIC Incomer End Termination(s)	No. of 33kV Adapter Panel End Termination(s)	No. of 33kV FCL Panel End Termination(s)	No. of 33kV GIS Panel End Termination(s)	No. of 33kV Straight Through Joints @500mtrs	Trefoil Clamp	Single Clamp	
1	Cabling from 220/34.5kV Power Transformer of 220/33kV Switchyard to PR Generatin Bus (GIC Incomer-1/2 & 3/4) at SS-63	220/34.5kV Power Transformer of 220/33kV Switchyard	PR Generatin Bus at SS-63	3C	300sqmm	1 Run/ All phase	3	4	12	250	3000	12	0	12	0	0	0	6	0	250	Bonded at one end in single core and at both ends for three core cables.
2	Cabling from 33kV Adapter Panels of Existing URT (URT-1&2) at SS-63 to 33kV FCL (202&207-FCL) for incoming & outgoing at SS-63	33kV Adapter Panels at SS-63 of Existing URT (URT-1&2)	33kV FCL (202&207-FCL) for incoming & outgoing at SS-63	1C	630sqmm	3 Run/ Phase	9	4	36	40	1440	0	0	0	36	36	0	3	13	0	
3	Cabling from 220/34.5kV Power Transformer of 220/33kV Switchyard to PR Side 33kV LIB at SS-63	220/34.5kV Power Transformer of 220/33kV Switchyard	PR Side 33kV LIB at SS-63	3C	300sqmm	1 Run/ All phase	3	2	6	250	1500	6	6	0	0	0	0	3	0	250	
4	Cabling from PR Side 33kV LIB at SS-63 to PNCP side 33kV LIB at SS-9	PR Side 33kV LIB at SS-63	PNCP side 33kV LIB at SS-9	3C	300sqmm	1 Run/ All phase	3	2	6	4500	27000	0	12	0	0	0	0	54	0	4500	
5	Cabling from PNCP side 33kV LIB at SS-9 to PNCP side GIS Generation Bus at SS-9	PNCP side 33kV LIB at SS-9	PNCP side GIS Generation Bus at SS-9	1C	400sqmm	3	9	2	18	80	1440	0	18	0	0	0	18	3	27	0	
									3Cx300sqmm		31500	18	18	12	0	0	0	63	0	5000	
									1Cx400sqmm		1440	0	18	0	0	0	18	3	27	0	
									1Cx630sqmm		1440	0	0	0	36	36	0	3	13	0	
									Total:		34380	18	36	12	36	36	18	69	40	5000	

REFERENCE DRAWING (S)/ DOCUMENT(S) –

SL. NO.	DRAWING/ DOCUMENT NO.	DRAWING TITLE
3.	ANNEXURE–7P	220kV GIS– SLD
2.	ANNEXURE–S–2/C–1/5	INTERCONNECTION SLD FOR PR
1.	ANNEXURE–S–2/C–1/6	INTERCONNECTION SLD FOR PNCP POWER EVACUATION FACILITY

PROJECT: LSTK JOB FOR ISBL WORK OF 220kV GRID POWER IMPORT AT PANIPAT REFINERY
LOA NO. RPRC182491/26286965 DTD.24.01.2020

OWNER: INDIAN OIL CORPORATION LIMITED

CONSULTANT: TATA CONSULTING ENGINEERS LIMITED

भारत हेवी इलेक्ट्रिकल्स लिमिटेड
ट्रांसमिशन परियोजना विभाग
BHARAT HEAVY ELECTRICALS LTD.
TRANSMISSION PROJECTS DIVISION

	NAME	SIGN.	DATE
DRN.	PK	–sd–	03.02.2020
CHD.	DKS	–sd–	03.02.2020
APPD.	VK	–sd–	03.02.2020

REV.	DATE	ALTERED / CHECKED / APPROVED	ZONE
05	10.06.20	ALTERED PK; CHECKED DKS; APPROVED VK	AS PER TCE/IOCL COMMENTS DTD.09.05.2020 & 09.05.2020.
04	07.05.20	ALTERED PK; CHECKED DKS; APPROVED VK	AS PER TCE/IOCL COMMENTS DTD.30.04.2020 & 06.05.2020.
03	27.04.20	ALTERED PK; CHECKED DKS; APPROVED VK	AS PER TCE/IOCL COMMENTS DTD.23.04.2020 & 22.04.2020.
02	22.04.20	ALTERED PK; CHECKED DKS; APPROVED VK	AS PER TCE/IOCL COMMENTS DTD. 30.03.2020 & 22.04.2020
01	14.02.20	ALTERED PK; CHECKED DKS; APPROVED VK	AS PER HVPNL/IOCL COMMENTS ON DTD. 13.02.2020 IN HVPNL OFFICE.

DEPT. TBEM | CODE. 411 | UNTOL. DIMS. GR. ~~C/M/F~~ | SCALE –N.A.– | WEIGHT (KG) –N.A.– | REF. TO ASSY. DRG. –N.A.– | ITEM NO. –N.A.– | NO.OF ITEMS –N.A.–

TITLE: 220/33KV SWITCHYARD–SINGLE LINE DIAGRAM

DRAWING/ DOCUMENT NO. TB–411–510–001 | REV. 05

SHT. No 03 | NO. OF SHT. 03

COMPUTER FILE NAME | REF. DRG. NO. | SIGN. AND DATE | INVENTORY NO

SIZE–A1

FIRST ANGLE PROJECTION

(ALL DIMENSIONS ARE IN mm)

THE INFORMATION ON THIS DOCUMENT IS THE PROPERTY OF BHARAT HEAVY ELECTRICALS LIMITED. IT MUST NOT BE USED DIRECTLY OR INDIRECTLY IN ANY WAY DETRIMENTAL TO THE INTEREST OF THE COMPANY

COMPUTER FILE NAME

REF. DRG. NO.

SIGN. AND DATE

INVENTORY NO

LEGEND

DEVICE	FUNCTION
87LD1/2	LINE DIFFERENTIAL PROTECTION MAIN-1/2
21M1/2	DIST. PROTECTION MAIN-1/2
79	AUTO-RECLOSE FUNCTION
25	CHECK SYNCHRONISING FUNCTION
DFL	DISTURBANCE/FAULT LOCATOR
98	VT FUSE FAIL RELAY
59	OVER VOLTAGE RELAY
67/67N	DIRECTIONAL IDMT PHASE O/C / E/F PROTECTION WITH HIGH SET FUNCTION
85	CARRIER-AIDED INER-TRIPPING FUNCTION
SER	SEQUENCE OF EVENT RECORDER
27	UNDER VOLTAGE PROTECTION
DR	DISTURBANCE RECORDER
BCU	BAY CONTROL UNIT
87B1/B2	BUSBAR DIFFERENTIAL PROTECTION MAIN-1/2 (WITH IN-BUILT CHECK ZONE)
50 LBB	LOCAL BREAKER BACKUP PROTECTION
EM M/C	ENERGY METER MAIN/CHECK
87T1/T2	TRANSFORMER DIFFERENTIAL PROTECTION MAIN-1/2
64T HV/LV	TRANSFORMER REF PROTECTION
99 HV/LV	TRANSFORMER OVER-FLUXING PROTECTION
50/50N	NON DIRECTIONAL INSTANTANEOUS PHASE O/C / E/F PROTECTION WITH HIGH SET FUNCTION
51/51N	NON DIRECTIONAL IDMT PHASE O/C / E/F PROTECTION WITH HIGH SET FUNCTION
63 PRTX	PRESSURE RELIEF DEVICE, TRIP
63 AX/TX	BUCHHOLZ RELAY, ALARM/TRIP
49W AX/TX	WINDING TEMPERATURE HIGH, ALARM/TRIP
49O AX/TX	OIL TEMPERATURE HIGH, ALARM/TRIP
OLAX	OIL LEVEL LOW, ALARM
SCAP	SYNCHRONISATION, CONTROL & ANNUNCIATION PANEL
LMS	LOAD MANAGEMENT SYSTEM
TRANSD PANEL	CENTRAL TRANSDUCER PANEL
51N HV/LV	TRANSFORMER STAND-BY E/F PROTECTION, HV/LV NEUTRAL
87CD	CABLE DIFFERENTIAL PROTECTION
MFM	MULTI-FUNCTION METER
OSR TX	OIL SURGE RELAY, TRIP
FTBS	FAST BUS TRANSFER RELAY
68	BLOCKING RELAY
195/295	TRIP CIRCUIT SUPERVISION
186/286	MASTER TRIP RELAY
80A/80B	PANEL DC SUPERVISION RELAY

SYMBOLS

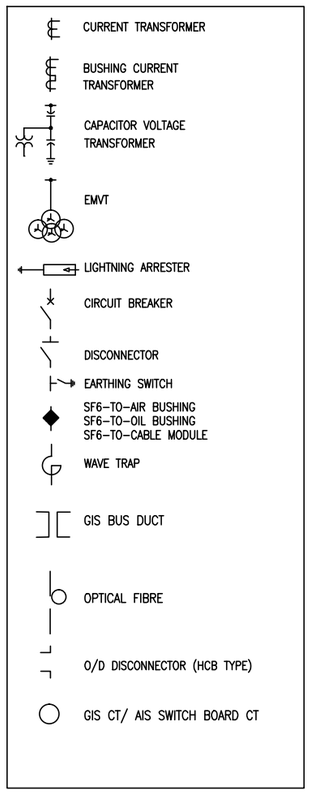

220kV BUS VT SELECTION LOGIC TO BE DEVELOPED IN BCU

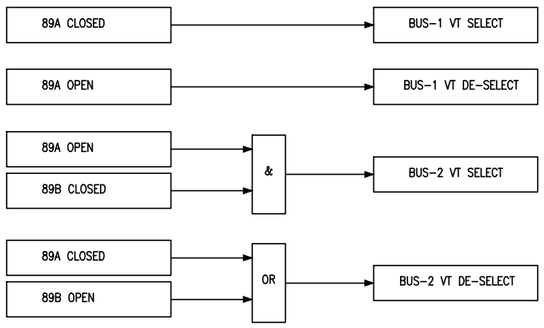

NOTES (FOR IOCL PANIPAT END)

1. ALL PROTECTION FEATURES SHOWN IN THIS DRAWING SHALL BE PROVIDED IN THE OFFERED SYSTEM.
2. REFERENCE DRAWING: SINGLE LINE DIAGRAM FOR 220/33kV SWITCHYARD SINGLE LINE DIAGRAM DWG NO. TB-1-411-510-001, REV. 01
3. FOR THE 220 kV SYSTEM, pF RATING OF CVT SHALL BE 8800pF AND mH RATING OF WAVE TRAPS SHALL BE 1250A, 1.0mH, 31.5kA/1sec; IOCL/ HVPNL TO CONFIRM THE SAME.
4. DIFFERENTIAL cum DISTANCE PROTECTION RELAY AT IOCL END SHALL MATCH WITH THAT SUPPLIED FOR REMOTE END.
5. ---
6. ---
7. ---
8. ---
9. DIFFERENTIAL cum DISTANCE PROTECTION RELAY AT BOTH ENDS WILL BE CONNECTED THROUGH DIRECT FIBRE CONNECTION (SINGLE MODE).
10. OPGW, OPGW GANTRY BOX (JOINT BOX), FOTE (MULTIPLEXER SDH/PDH etc) ARE NOT IN BHEL/ IOCL SCOPE.
11. ---
12. ALL VT SELECTION SCHEMES SHALL BE AUTOMATIC CHANGEOVER SCHEMES BASED ON LOGICS DEVELOPED IN BCU.
13. CHECK SYNCH FEATURE ALONG WITH DEAD BUS CHARGING PROVISION SHALL BE KEPT FOR ALL 220kV BREAKERS AS PART OF BCU AS WELL AS SCAP PANEL.

TATA CONSULTING ENGINEERS LIMITED MUMBAI

TATA CONSULTING ENGINEERS LIMITED
VENDOR DOCUMENT REVIEW STATUS

- ☐ A. Document approved as submitted; proceed with fabrication/construction.
- ☐ B. Document approved subject to comments noted; proceed with fabrication/construction considering our comments.
- ☐ C. Our comments are noted on this marked up print.
- ☐ D. Our comments are noted in the memo attached to the forwarding transmittal Letter No._____ Dated _____
- ☐ E. Correct original of this document to reflect our comments and resubmit for approval.
- ☐ F. Correct original of this document to reflect our comments and resubmitted for records.
- ☐ G. Document of this category are for information only and not for approval. Information furnished on the document is noted.
- ☐ H. Document reviewed against our previous comments and other revisions highlighted and identified by the vendor.
- ☐ I. Document returned without review.

Approval conveyed herein neither relieves Vendor/Contractor of his contractual obligations and his responsibilities for correctness of dimensions, materials of construction, weights, quantities, design details, assembly fits, system/performance requirements and conformity of supplies with Indian Statutory Laws as may be applicable, nor does it limit the Purchaser's rights under the contract.

Review ____ Date 04/06/2020

NOTES (FOR REMOTE END - HVPNL MUNDH S/S)

1. ALL PROTECTION FEATURES SHOWN IN THIS DRAWING SHALL BE PROVIDED IN THE OFFERED SYSTEM.
2. ----
3. FOR THE 220 kV SYSTEM, pF RATING OF CVT SHALL BE 8800pF AND mH RATING OF WAVE TRAPS SHALL BE 1250A, 1.0mH, 31.5kA/1sec; IOCL/ HVPNL TO CONFIRM THE SAME.
4. DIFFERENTIAL cum DISTANCE PROTECTION RELAY AT MUNDH S/S END SHALL MATCH WITH THAT SUPPLIED FOR IOCL PANIPAT END.
5. REMOTE END PLCC ITEMS (WAVE TRAPS, DIGITAL PLCC TERMINALS, COUPLING DEVICE, ASSOCIATED DC SYSTEM) AT MUNDH S/S ARE IN THE SCOPE OF BHEL.
6. REMOTE END DIFFERENTIAL cum DISTANCE PROTECTION RELAY SHALL BE SUPPLIED LOOSE BY BHEL AND WILL BE INTEGRATED WITH EXISTING SAS AT MUNDH S/S.
7. HVPNL TO ENSURE ADEQUACY OF SPACE & FACILITIES TO INSTALL PLCC ITEMS AND DIFFERENTIAL cum DISTANCE PROTECTION RELAY AT REMOTE END (MUNDH S/S).
8. DIFFERENTIAL cum DISTANCE PROTECTION RELAY AT REMOTE END (MUNDH S/S) WILL BE MOUNTED IN RESPECTIVE PROTECTION PANEL OF HVPNL. SUPPLY OF PROTECTION PANELS IS NOT IN PRESENT SCOPE. HOWEVER, INSTALLATION, TESTING & COMMISSIONING AND INTEGRATION TO EXISTING SCADA IS IN BHEL SCOPE.
9. DIFFERENTIAL cum DISTANCE PROTECTION RELAY AT BOTH ENDS WILL BE CONNECTED THROUGH DIRECT FIBRE CONNECTION (SINGLE MODE).
10. OPGW, OPGW GANTRY BOX (JOINT BOX), FOTE (MULTIPLEXER SDH/PDH etc) ARE NOT IN BHEL/ IOCL SCOPE.
11. EXISTING DETAILS OF REMOTE END STATION TO BE INFORMED BY HVPNL (SLD, CT, VT DETAILS, SAS SCHEMES).
12. EXISTING BUS VT SELECTION CIRCUIT SHALL BE USED FOR EXTENDING VT INPUT TO 21M1/ M2 AT MUNDH SUBSTATION.

REV.	DATE	ALTERED	RD
04	04/06/2020	CHD/APPD	VK
ZONE	REVISED AS PER TCE & IOCL COMMENTS DT 03/06/2020		
03	28/05/2020	CHD/APPD	VK
ZONE	REVISED AS PER TCE & IOCL COMMENTS DT 28/05/2020		
02	23/05/2020	CHD/APPD	VK
ZONE	REVISED AS PER TCE & IOCL COMMENTS DT 04/05/2020		
01	29/04/2020	CHD/APPD	VK
ZONE	REVISED AS PER TCE & IOCL COMMENTS DT 19/03/2020		

CUSTOMER: LSTK JOB FOR ISBL WORK OF 220kV GRID POWER IMPORT AT PANIPAT REFINERY
LOA NO. RPRC182491/26286965 DTD.24.01.2020

OWNER: INDIAN OIL CORPORATION LIMITED

CONSULTANT: TATA CONSULTING ENGINEERS LIMITED

BHARAT HEAVY ELECTRICALS LTD. TRANSMISSION BUSINESS GROUP

	NAME	SIGN.	DATE
DRN.	RD		12.03.2020
CHD.	RD		12.03.2020
APPD.	VK		12.03.2020

DEPT. TBEM	UNTOL. DIMS. GR. g/M/F	SCALE	WEIGHT (KG)	REF. TO ASSY. DRG.	ITEM NO.	NO.OF ITEMS
CODE 411		N.T.S	N.A.	N.A.	N.A.	N.A.

TITLE: 220/33KV SWITCHYARD- KEY METERING & PROTECTION SINGLE LINE DIAGRAM

DRAWING/ DOCUMENT NO. TB-3-411-510-002 REV. 04

SHT. No 01 NO. OF SHT. 08

SIZE-A3

FIRST ANGLE PROJECTION

(ALL DIMENSIONS ARE IN mm)

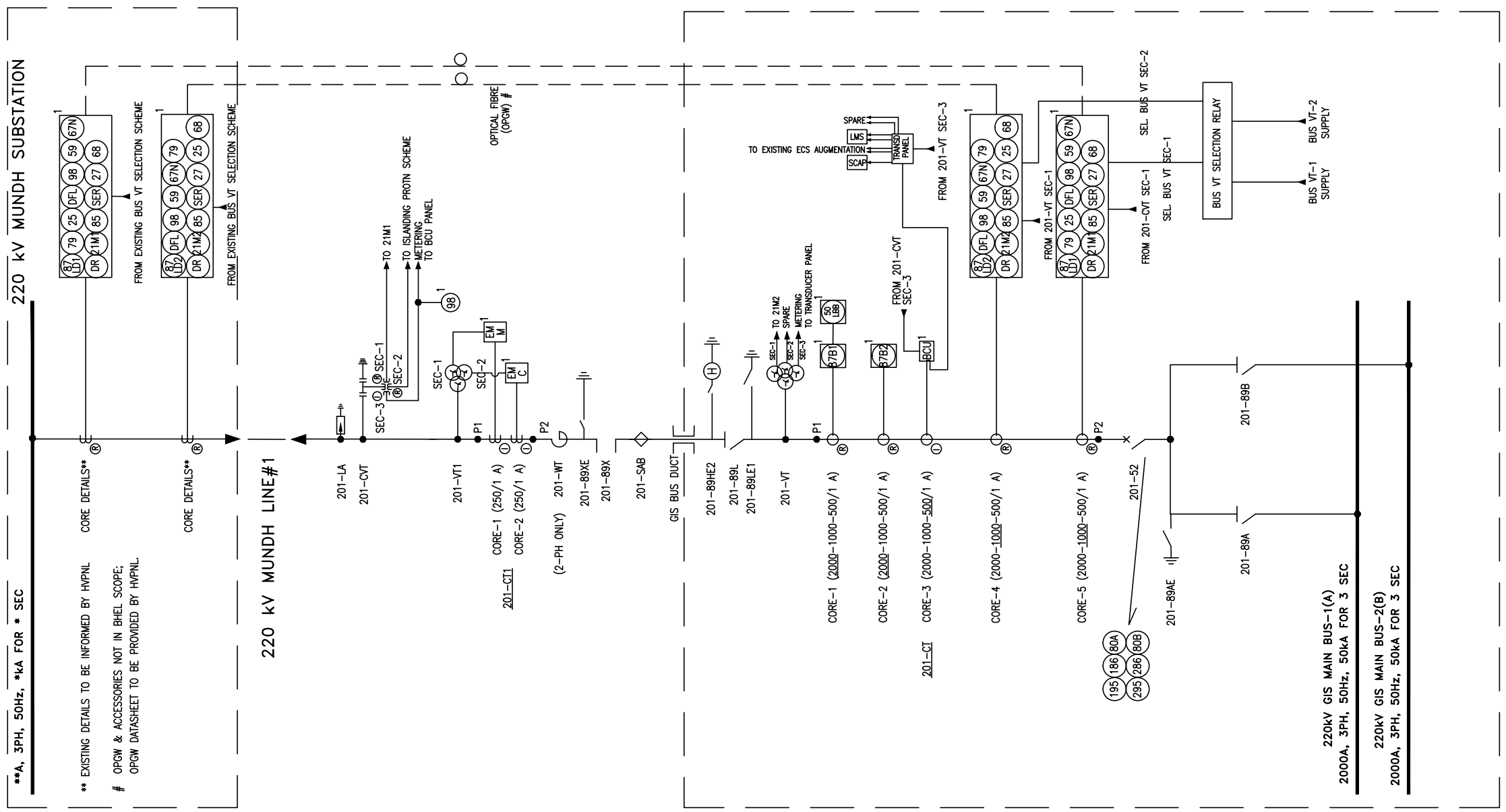

THIS DIAGRAM APPLICABLE FOR 220kV LINE BAY# 211 ALSO.

APPLICABLE FOR 220kV GRID INCOMER BAY# 1/2 FROM HVPNL

THE INFORMATION ON THIS DOCUMENT IS THE PROPERTY OF BHARAT HEAVY ELECTRICALS LIMITED. IT MUST NOT BE USED DIRECTLY OR INDIRECTLY IN ANY WAY DETRIMENTAL TO THE INTEREST OF THE COMPANY

COMPUTER FILE NAME | REF. DRG. NO. | SIGN. AND DATE | INVENTORY NO

REV.	DATE	ALTERED		ZONE	REVISED AS PER TCE & IOCL COMMENTS
04	04/06/2020	RD	CHD/APPD VK		DT 03/06/2020
03	28/05/2020	RD	CHD/APPD VK		DT 28/05/2020
02	23/05/2020	RD	CHD/APPD VK		DT 04/05/2020
01	29/04/2020	RD	CHD/APPD VK		DT 19/03/2020

CUSTOMER: LSTK JOB FOR ISBL WORK OF 220kV GRID POWER IMPORT AT PANIPAT REFINERY
LOA NO. RPRC182491/26286965 DTD.24.01.2020

OWNER: INDIAN OIL CORPORATION LIMITED

CONSULTANT: TATA CONSULTING ENGINEERS LIMITED

BHARAT HEAVY ELECTRICALS LTD. TRANSMISSION BUSINESS GROUP

	NAME	SIGN.	DATE
DRN.	RD		12.03.2020
CHD.	RD		12.03.2020
APPD.	VK		12.03.2020

DEPT. TBEM	UNTOL. DIMS.	SCALE	WEIGHT (KG)	REF. TO ASSY. DRG.	ITEM NO.	NO.OF ITEMS
CODE 411	GR. g/m/f	N.T.S	N.A.	N.A.	N.A.	N.A.

TITLE: 220/33KV SWITCHYARD- KEY METERING & PROTECTION SINGLE LINE DIAGRAM

DRAWING/ DOCUMENT NO. TB-3-411-510-002 REV. 04

SHT. No 02 NO. OF SHT. 08

SIZE-A3

INVENTORY NO	SIGN. AND DATE	REF. DRG. NO.	COMPUTER FILE NAME

THE INFORMATION ON THIS DOCUMENT IS THE PROPERTY OF BHARAT HEAVY ELECTRICALS LIMITED. IT MUST NOT BE USED DIRECTLY OR INDIRECTLY IN ANY WAY DETRIMENTAL TO THE INTEREST OF THE COMPANY

FIRST ANGLE PROJECTION

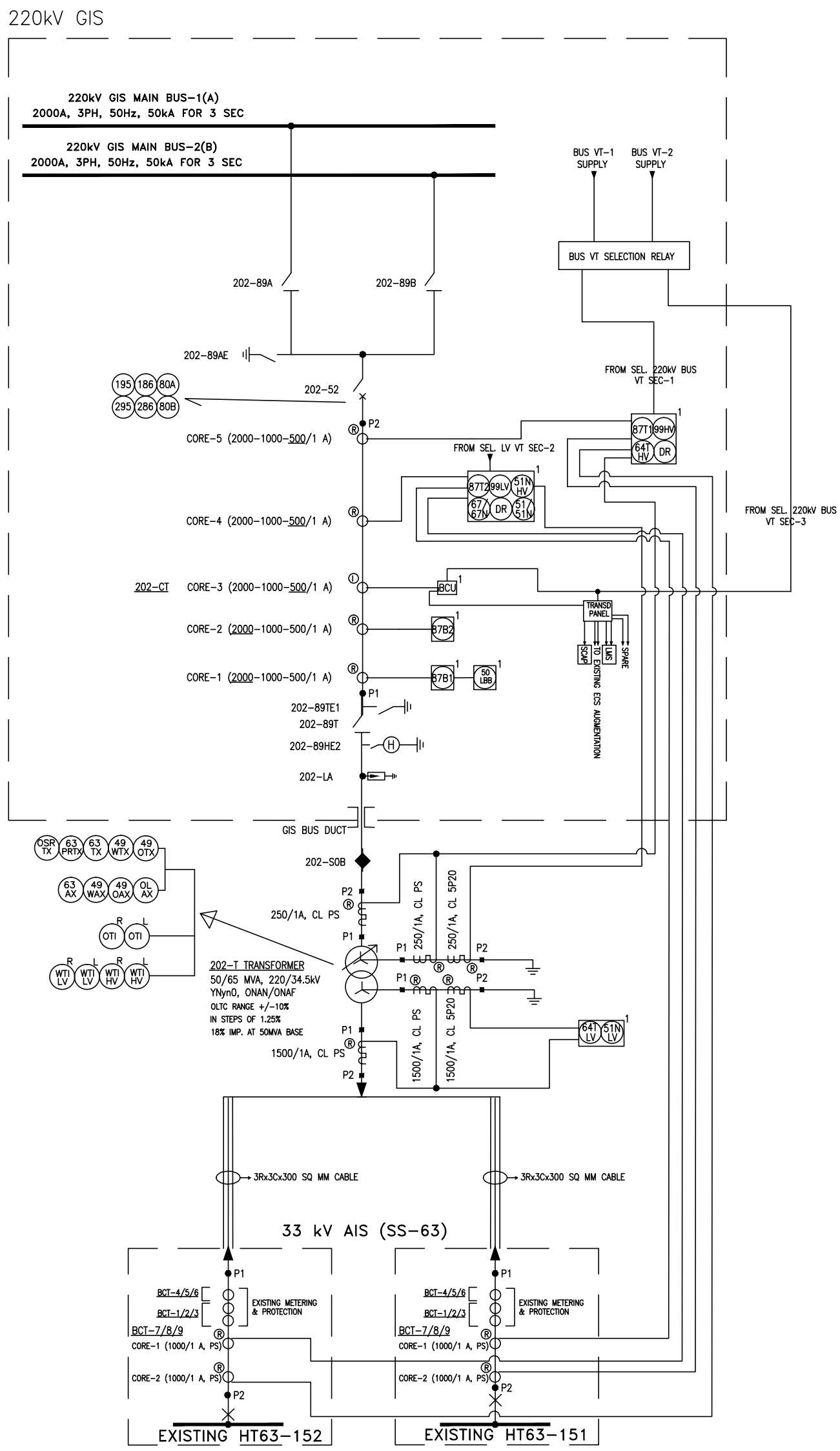

APPLICABLE FOR 220/34.5kV PR O/G TRAFO BAY# 1/2 (BAY-202 & 207)

(ALL DIMENSIONS ARE IN mm)

REV.	DATE	ALTERED	CHD/APPD	ZONE	REVISED AS PER
04	04/06/2020	RD	VK		TCE & IOCL COMMENTS DT 03/06/2020
03	28/05/2020	RD	VK		TCE & IOCL COMMENTS DT 28/05/2020
02	23/05/2020	RD	VK		TCE & IOCL COMMENTS DT 04/05/2020
01	29/04/2020	RD	VK		TCE & IOCL COMMENTS DT 19/03/2020

CUSTOMER: LSTK JOB FOR ISBL WORK OF 220kV GRID POWER IMPORT AT PANIPAT REFINERY
LOA NO. RPRC182491/26286965 DTD.24.01.2020

OWNER: IndianOil

CONSULTANT: TATA

INDIAN OIL CORPORATION LIMITED

TATA CONSULTING ENGINEERS LIMITED

BHARAT HEAVY ELECTRICALS LTD. TRANSMISSION BUSINESS GROUP

	NAME	SIGN.	DATE
DRN.	RD		12.03.2020
CHD.	RD		12.03.2020
APPD.	VK		12.03.2020

DEPT.	UNTOL. DIMS.	SCALE	WEIGHT (KG)	REF. TO ASSY. DRG.	ITEM NO.	NO. OF ITEMS
TBEM	GR. g/M/gf	N.T.S	N.A.	N.A.	N.A.	N.A.

CODE 411

TITLE: 220/33KV SWITCHYARD- KEY METERING & PROTECTION SINGLE LINE DIAGRAM

DRAWING/ DOCUMENT NO. TB-3-411-510-002 REV. 04

SHT. No 03 NO. OF SHT. 08

SIZE-A3

INVENTORY NO	SIGN. AND DATE	REF. DRG. NO.	COMPUTER FILE NAME

THE INFORMATION ON THIS DOCUMENT IS THE PROPERTY OF BHARAT HEAVY ELECTRICALS LIMITED. IT MUST NOT BE USED DIRECTLY OR INDIRECTLY IN ANY WAY DETRIMENTAL TO THE INTEREST OF THE COMPANY

FIRST ANGLE PROJECTION

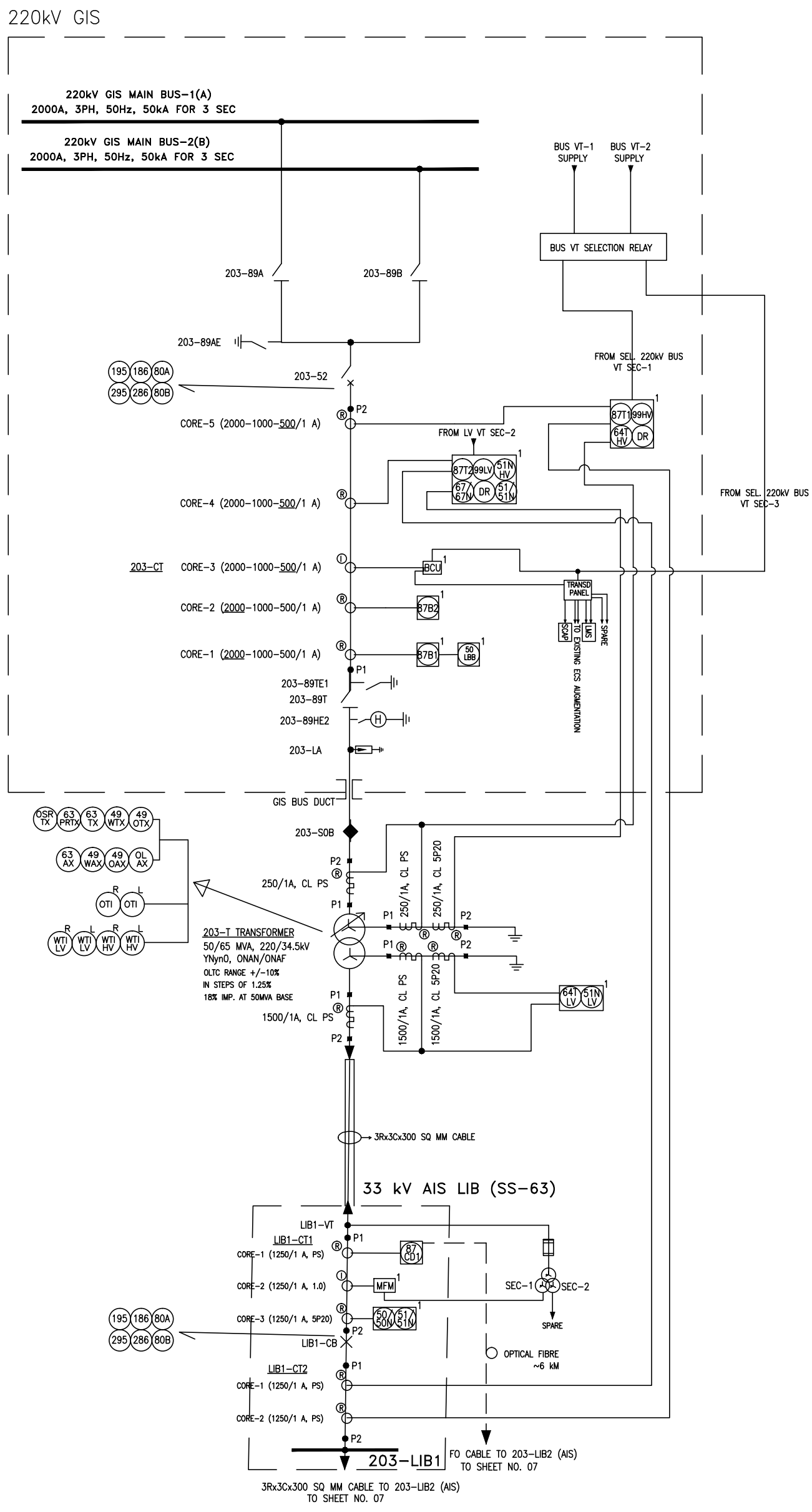

APPLICABLE FOR 220/34.5kV PNCP O/G TRAFO BAY# 1/2 (BAY-203 & 208)

(ALL DIMENSIONS ARE IN mm)

REV.	DATE	ALTERED	CHD/APPD	ZONE	REMARKS
04	04/06/2020	RD	VK		REVISED AS PER TCE & IOCL COMMENTS DT 03/06/2020
03	28/05/2020	RD	VK		REVISED AS PER TCE & IOCL COMMENTS DT 28/05/2020
02	23/05/2020	RD	VK		REVISED AS PER TCE & IOCL COMMENTS DT 04/05/2020
01	29/04/2020	RD	VK		REVISED AS PER TCE & IOCL COMMENTS DT 19/03/2020

CUSTOMER: LSTK JOB FOR ISBL WORK OF 220kV GRID POWER IMPORT AT PANIPAT REFINERY
LOA NO. RPRC182491/26286965 DTD.24.01.2020

OWNER: IndianOil

CONSULTANT: TATA CONSULTING ENGINEERS LIMITED

INDIAN OIL CORPORATION LIMITED

BHARAT HEAVY ELECTRICALS LTD. TRANSMISSION BUSINESS GROUP

DEPT. TBEM CODE 411	UNTOL. DIMS. GR. g/M/f	SCALE N.T.S	WEIGHT (KG) N.A.

TITLE: 220/33KV SWITCHYARD- KEY METERING & PROTECTION SINGLE LINE DIAGRAM

	NAME	SIGN.	DATE
DRN.	RD		12.03.2020
CHD.	RD		12.03.2020
APPD.	VK		12.03.2020

REF. TO ASSY. DRG.	ITEM NO.	NO.OF ITEMS
N.A.	N.A.	N.A.

DRAWING/ DOCUMENT NO. TB-3-411-510-002 REV. 04

SHT. No 04 NO. OF SHT. 08

SIZE-A3

INVENTORY NO	SIGN. AND DATE	REF. DRG. NO.	COMPUTER FILE NAME

THE INFORMATION ON THIS DOCUMENT IS THE PROPERTY OF BHARAT HEAVY ELECTRICALS LIMITED. IT MUST NOT BE USED DIRECTLY OR INDIRECTLY IN ANY WAY DETRIMENTAL TO THE INTEREST OF THE COMPANY

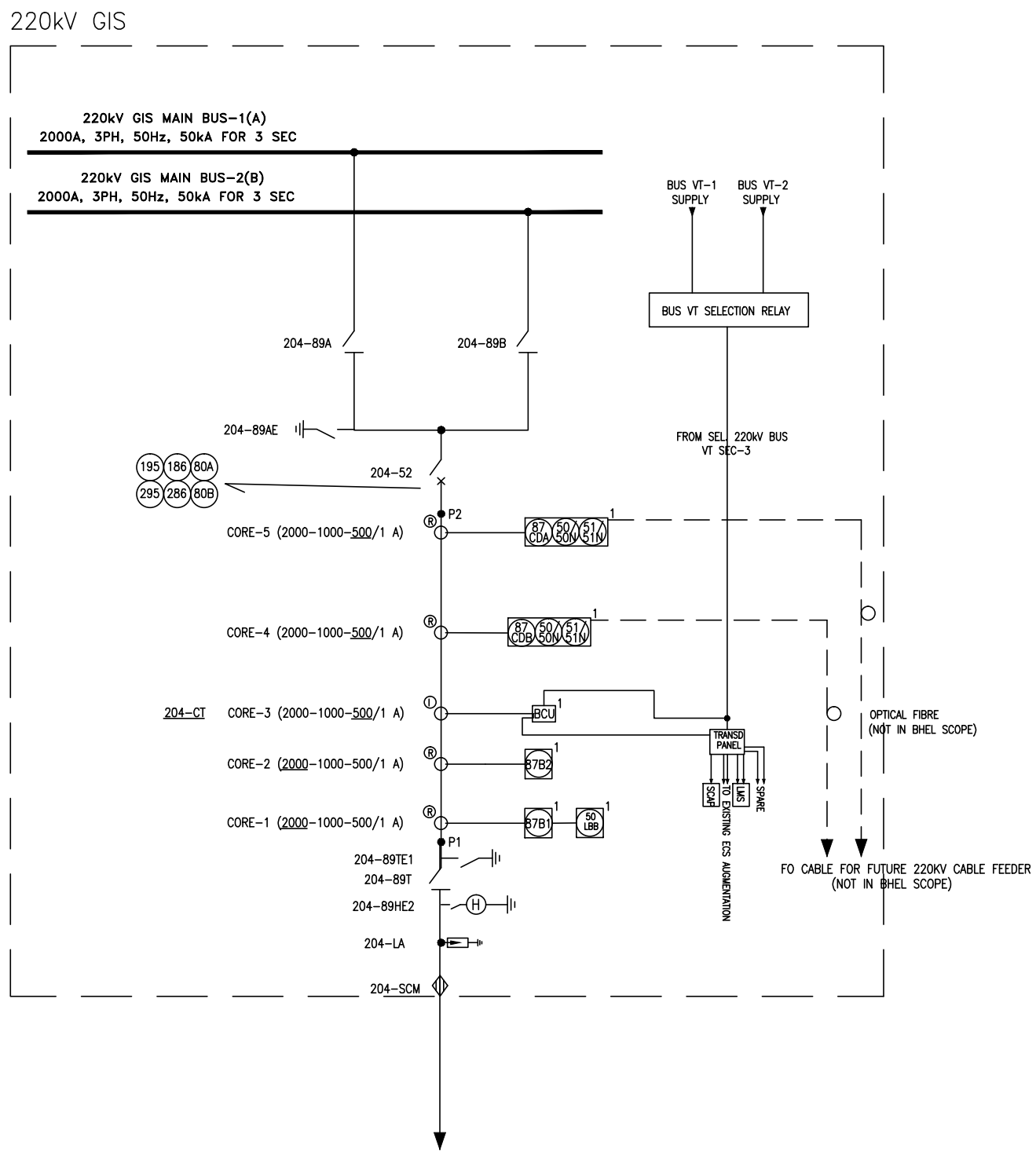

SPARE BAY-1
(FUTURE 220KV CABLE FEEDER)

APPLICABLE FOR 220kV SPARE BAY# 1/2/3/4 (BAY-204, 205, 209 & 210)

FIRST ANGLE PROJECTION

(ALL DIMENSIONS ARE IN mm)

ZONE	REV.	DATE	ALTERED	CHD/APPD	REVISED AS PER TCE & IOCL COMMENTS	DT 03/06/2020
	04	04/06/2020	RD	VK		
ZONE	REV.	DATE	ALTERED	CHD/APPD	REVISED AS PER TCE & IOCL COMMENTS	DT 28/05/2020
	03	28/05/2020	RD	VK		
ZONE	REV.	DATE	ALTERED	CHD/APPD	REVISED AS PER TCE & IOCL COMMENTS	DT 04/05/2020
	02	23/05/2020	RD	VK		
ZONE	REV.	DATE	ALTERED	CHD/APPD	REVISED AS PER TCE & IOCL COMMENTS	DT 19/03/2020
	01	29/04/2020	RD	VK		

CUSTOMER: LSTK JOB FOR ISBL WORK OF 220kV GRID POWER IMPORT AT PANIPAT REFINERY
LOA NO. RPRC182491/26286965 DTD.24.01.2020

OWNER: INDIAN OIL CORPORATION LIMITED

CONSULTANT: TATA CONSULTING ENGINEERS LIMITED

BHARAT HEAVY ELECTRICALS LTD.
TRANSMISSION BUSINESS GROUP

	NAME	SIGN.	DATE
DRN.	RD		12.03.2020
CHD.	RD		12.03.2020
APPD.	VK		12.03.2020

DEPT. TBEM CODE 411	UNTOL. DIMS. GR. g/M/f	SCALE N.T.S	WEIGHT (KG) N.A.	REF. TO ASSY. DRG. N.A.	ITEM NO. N.A.	NO.OF ITEMS N.A.

TITLE: 220/33KV SWITCHYARD- KEY METERING & PROTECTION SINGLE LINE DIAGRAM

DRAWING/ DOCUMENT NO. TB-3-411-510-002 REV. 04

SHT. No 05 NO. OF SHT. 08

SIZE-A3

FIRST ANGLE PROJECTION

(ALL DIMENSIONS ARE IN mm)

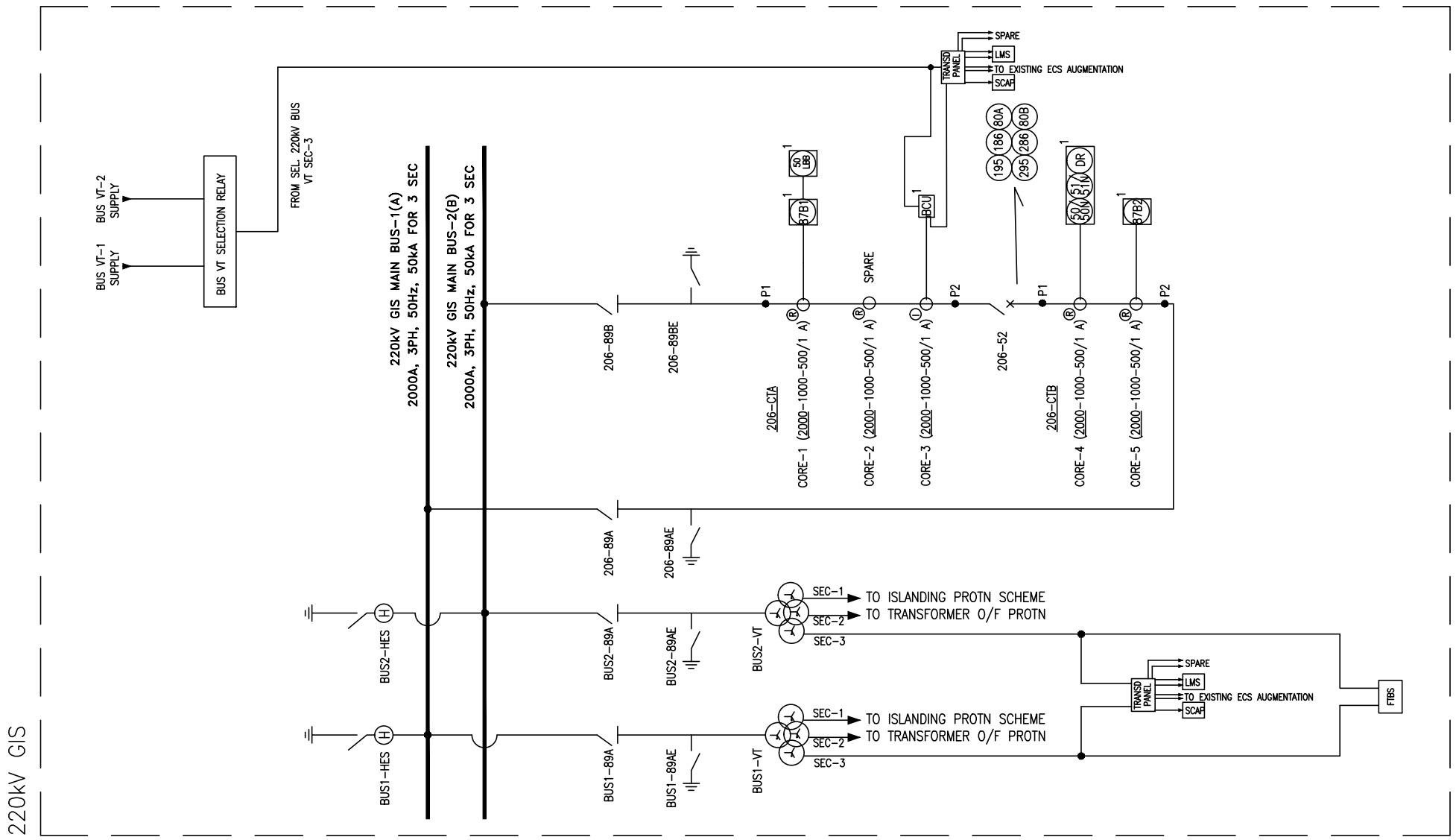

APPLICABLE FOR 220kV BUS COUPLER (BAY-206) & BUS VT-1/2

THE INFORMATION ON THIS DOCUMENT IS THE PROPERTY OF BHARAT HEAVY ELECTRICALS LIMITED. IT MUST NOT BE USED DIRECTLY OR INDIRECTLY IN ANY WAY DETRIMENTAL TO THE INTEREST OF THE COMPANY

COMPUTER FILE NAME

REF. DRG. NO.

SIGN. AND DATE

INVENTORY NO

REV.	DATE	ALTERED	RD	ZONE	REVISED AS PER TCE & IOCL COMMENTS DT 03/06/2020
04	04/06/2020	CHD/APPD	VK		
03	28/05/2020	CHD/APPD	VK		REVISED AS PER TCE & IOCL COMMENTS DT 28/05/2020
02	23/05/2020	CHD/APPD	VK		REVISED AS PER TCE & IOCL COMMENTS DT 04/05/2020
01	29/04/2020	CHD/APPD	VK		REVISED AS PER TCE & IOCL COMMENTS DT 19/03/2020

CUSTOMER: LSTK JOB FOR ISBL WORK OF 220kV GRID POWER IMPORT AT PANIPAT REFINERY
LOA NO. RPRC182491/26286965 DTD.24.01.2020

OWNER: INDIAN OIL CORPORATION LIMITED

CONSULTANT: TATA CONSULTING ENGINEERS LIMITED

BHARAT HEAVY ELECTRICALS LTD. TRANSMISSION BUSINESS GROUP

	NAME	SIGN.	DATE
DRN.	RD		12.03.2020
CHD.	RD		12.03.2020
APPD.	VK		12.03.2020

DEPT. TBEM CODE 411	UNTOL. DIMS. GR. g/M/f	SCALE N.T.S	WEIGHT (KG) N.A.	REF. TO ASSY. DRG. N.A.	ITEM NO. N.A.	NO.OF ITEMS N.A.

TITLE: 220/33KV SWITCHYARD- KEY METERING & PROTECTION SINGLE LINE DIAGRAM

DRAWING/ DOCUMENT NO. TB-3-411-510-002 REV. 04

SHT. No 06 NO. OF SHT. 08

SIZE-A3

INVENTORY NO	SIGN. AND DATE	REF. DRG. NO.	COMPUTER FILE NAME

THE INFORMATION ON THIS DOCUMENT IS THE PROPERTY OF BHARAT HEAVY ELECTRICALS LIMITED. IT MUST NOT BE USED DIRECTLY OR INDIRECTLY IN ANY WAY DETRIMENTAL TO THE INTEREST OF THE COMPANY

FIRST ANGLE PROJECTION

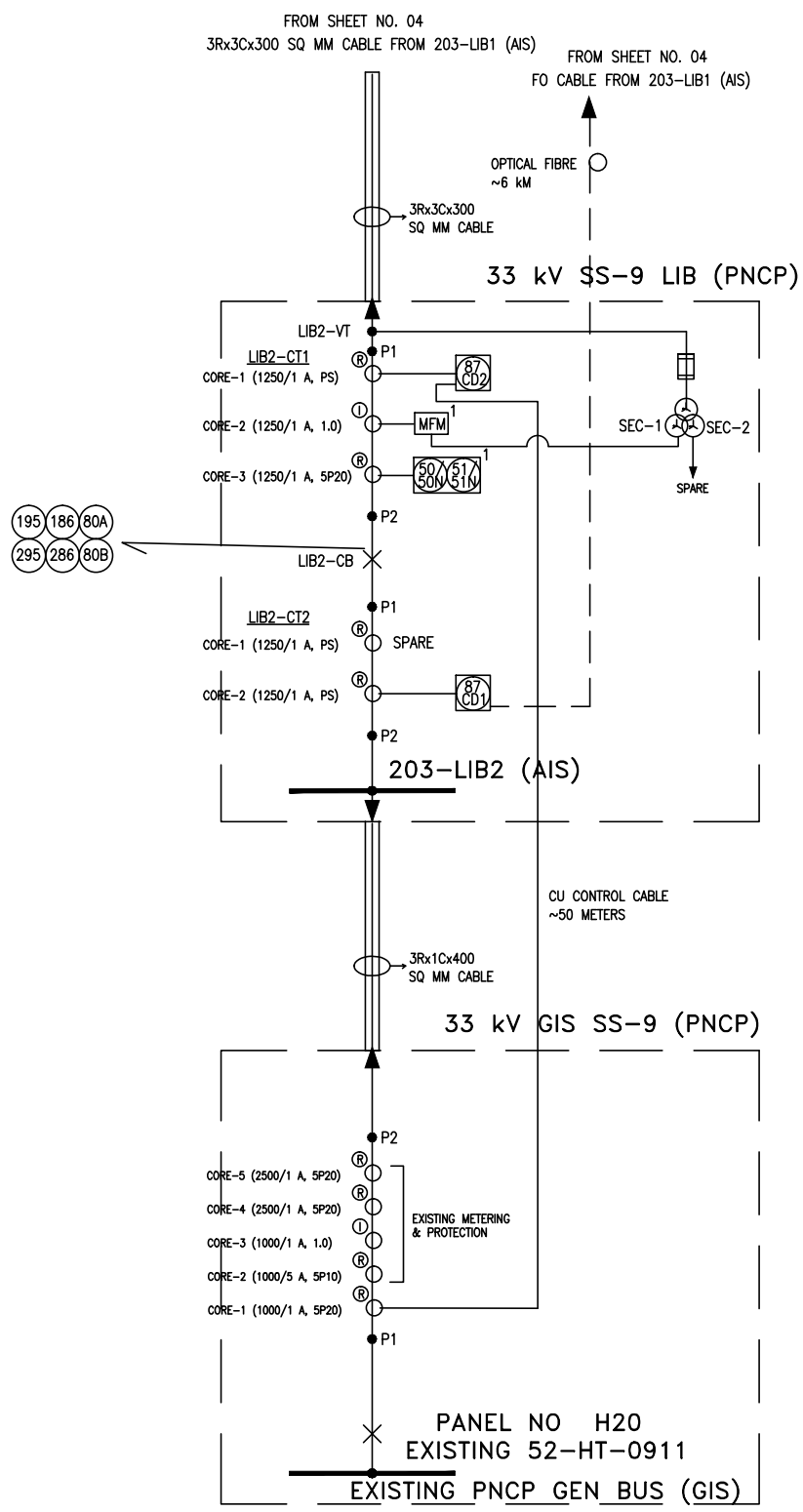

APPLICABLE FOR 33kV FEEDERS TO PNCP SS-9 (203-LIB1/2 & 208-LIB1/2)

(ALL DIMENSIONS ARE IN mm)

REV.	DATE	ALTERED	CHD/APPD	ZONE	REVISED AS PER
04	04/06/2020	RD	VK		TCE & IOCL COMMENTS DT 03/06/2020
03	28/05/2020	RD	VK		TCE & IOCL COMMENTS DT 28/05/2020
02	23/05/2020	RD	VK		TCE & IOCL COMMENTS DT 04/05/2020
01	29/04/2020	RD	VK		TCE & IOCL COMMENTS DT 19/03/2020

CUSTOMER: LSTK JOB FOR ISBL WORK OF 220kV GRID POWER IMPORT AT PANIPAT REFINERY
LOA NO. RPRC182491/26286965 DTD.24.01.2020

OWNER: INDIAN OIL CORPORATION LIMITED

CONSULTANT: TATA CONSULTING ENGINEERS LIMITED

BHARAT HEAVY ELECTRICALS LTD.
TRANSMISSION BUSINESS GROUP

	NAME	SIGN.	DATE
DRN.	RD		12.03.2020
CHD.	RD		12.03.2020
APPD.	VK		12.03.2020

DEPT. TBEM	UNTOL. DIMS.	SCALE	WEIGHT (KG)	REF. TO ASSY. DRG.	ITEM NO. / NO.OF ITEMS
CODE 411	GR. g/m/f	N.T.S	N.A.	N.A.	N.A. / N.A.

TITLE: 220/33KV SWITCHYARD- KEY METERING & PROTECTION SINGLE LINE DIAGRAM

DRAWING/ DOCUMENT NO. TB-3-411-510-002 REV. 04

SHT. No 07 NO. OF SHT. 08

SIZE-A3

FIRST ANGLE PROJECTION

(ALL DIMENSIONS ARE IN mm)

220 kV CURRENT TRANSFORMER (GIS CT)

CORE NO.	CURRENT RATIO	OUTPUT BURDEN AT LOWEST TAP	MIN KPV	MAX Ie AT KPV	MAX RCT	ACCURACY CLASS	PURPOSE
1	2000-1000-500/1A	-	2000-1000-500V	30-60-120mA	10-5-2.5 Ohms	PS	PROTECTION
2	2000-1000-500/1A	-	2000-1000-500V	30-60-120mA	10-5-2.5 Ohms	PS	PROTECTION
3	2000-1000-500/1A	30VA	-	-	-	0.2s,Isf≤5	METERING
4	2000-1000-500/1A	-	2000-1000-500V	30-60-120mA	10-5-2.5 Ohms	PS	PROTECTION
5	2000-1000-500/1A	-	2000-1000-500V	30-60-120mA	10-5-2.5 Ohms	PS	PROTECTION

220 kV CURRENT TRANSFORMER - TARIFF METERING (OUTDOOR CT)

CORE NO.	CURRENT RATIO	OUTPUT BURDEN AT LOWEST TAP	MIN KPV	MAX Ie AT KPV	MAX RCT	ACCURACY CLASS	PURPOSE
1	250/1A	10VA	-	-	-	0.2s,Isf≤5	TARIFF METERING
2	250/1A	10VA	-	-	-	0.2s,Isf≤5	TARIFF METERING

BUSHING CURRENT TRANSFORMER (HV SIDE)

CORE NO.	CURRENT RATIO	OUTPUT BURDEN AT LOWEST TAP	MIN KPV	MAX Ie AT KPV/2	MAX RCT	ACCURACY CLASS	PURPOSE
1	250/1A	-	(20Rct + 100) V	30 mA	1.25 Ohms	PS	REF PROTECTION

BUSHING CURRENT TRANSFORMER (HV NEUTRAL SIDE)

CORE NO.	CURRENT RATIO	OUTPUT BURDEN AT LOWEST TAP	MIN KPV	MAX Ie AT KPV/2	MAX RCT	ACCURACY CLASS	PURPOSE
1	250/1A	-	(20Rct + 100) V	30 mA	1.25 Ohms	PS	REF PROTECTION
2	250/1A	20VA	-	-	-	5P20	SBEF PROTECTION

BUSHING CURRENT TRANSFORMER (LV SIDE)

CORE NO.	CURRENT RATIO	OUTPUT BURDEN AT LOWEST TAP	MIN KPV	MAX Ie AT KPV/2	MAX RCT	ACCURACY CLASS	PURPOSE
1	1500/1A	-	(150Rct + 300) V	30 mA	7.5 Ohms	PS	REF PROTECTION

220kV BUS VT (GIS EMVT)

WINDING NO.	VOLTAGE RATIO	RATED BURDEN	ACCURACY CLASS	PURPOSE
1	$\frac{220}{\sqrt{3}}/\frac{0.110}{\sqrt{3}}$ kV	50 VA	3P	PROTECTION
2	$\frac{220}{\sqrt{3}}/\frac{0.110}{\sqrt{3}}$ kV	50 VA	3P	PROTECTION
3	$\frac{220}{\sqrt{3}}/\frac{0.110}{\sqrt{3}}$ kV	120 VA	0.2	METERING

220kV CVT (8800 pF, +10%, -5%) - OUTDOOR CVT

WINDING NO.	VOLTAGE RATIO	RATED BURDEN	ACCURACY CLASS	PURPOSE
1	$\frac{220}{\sqrt{3}}/\frac{0.110}{\sqrt{3}}$ kV	50 VA	3P	PROTECTION
2	$\frac{220}{\sqrt{3}}/\frac{0.110}{\sqrt{3}}$ kV	50 VA	3P	PROTECTION
3	$\frac{220}{\sqrt{3}}/\frac{0.110}{\sqrt{3}}$ kV	50 VA	0.2	METERING

220kV VT - TARIFF METERING (OUTDOOR EMVT)

WINDING NO.	VOLTAGE RATIO	RATED BURDEN	ACCURACY CLASS	PURPOSE
1	$\frac{220}{\sqrt{3}}/\frac{0.110}{\sqrt{3}}$ kV	20 VA	0.2	TARIFF METERING
2	$\frac{220}{\sqrt{3}}/\frac{0.110}{\sqrt{3}}$ kV	20 VA	0.2	TARIFF METERING

BUSHING CURRENT TRANSFORMER (LV NEUTRAL SIDE)

CORE NO.	CURRENT RATIO	OUTPUT BURDEN AT LOWEST TAP	MIN KPV	MAX Ie AT KPV/2	MAX RCT	ACCURACY CLASS	PURPOSE
1	1500/1A	-	(150Rct + 300) V	30 mA	7.5 Ohms	PS	REF PROTECTION
2	1500/1A	20VA	-	-	-	5P20	SBEF PROTECTION

33 kV LIB CURRENT TRANSFORMER (LIB-CT1)

CORE NO.	CURRENT RATIO	OUTPUT BURDEN AT LOWEST TAP	MIN KPV	MAX Ie AT KPV/2	MAX RCT	ACCURACY CLASS	PURPOSE
1	1250/1A	-	625V	30mA	6.25 Ohms	PS	PROTECTION
2	1250/1A	30VA	-	-	-	1.0,Isf≤5	METERING
3	1250/1A	15VA	-	-	-	5P20	PROTECTION

33 kV LIB CURRENT TRANSFORMER (LIB-CT2)

CORE NO.	CURRENT RATIO	OUTPUT BURDEN AT LOWEST TAP	MIN KPV	MAX Ie AT KPV/2	MAX RCT	ACCURACY CLASS	PURPOSE
1	1250/1A	-	625V	30mA	6.25 Ohms	PS	PROTECTION
2	1250/1A	-	625V	30mA	6.25 Ohms	PS	PROTECTION

220kV LINE VT (GIS EMVT)

WINDING NO.	VOLTAGE RATIO	RATED BURDEN	ACCURACY CLASS	PURPOSE
1	$\frac{220}{\sqrt{3}}/\frac{0.110}{\sqrt{3}}$ kV	50 VA	3P	PROTECTION
2	$\frac{220}{\sqrt{3}}/\frac{0.110}{\sqrt{3}}$ kV	50 VA	3P	PROTECTION
3	$\frac{220}{\sqrt{3}}/\frac{0.110}{\sqrt{3}}$ kV	50 VA	0.2	METERING

33kV LIB VT

WINDING NO.	VOLTAGE RATIO	RATED BURDEN	ACCURACY CLASS	PURPOSE
1	$\frac{33}{\sqrt{3}}/\frac{0.110}{\sqrt{3}}$ kV	50 VA	1.0	METERING
2	$\frac{33}{\sqrt{3}}/\frac{0.110}{\sqrt{3}}$ kV	50 VA	3P	PROTECTION

THE INFORMATION ON THIS DOCUMENT IS THE PROPERTY OF BHARAT HEAVY ELECTRICALS LIMITED. IT MUST NOT BE USED DIRECTLY OR INDIRECTLY IN ANY WAY DETRIMENTAL TO THE INTEREST OF THE COMPANY

COMPUTER FILE NAME

REF. DRG. NO.

SIGN. AND DATE

INVENTORY NO

REV.	DATE	ALTERED	RD	CHD/APPD	VK	ZONE	REVISED AS PER TCE & IOCL COMMENTS DT 03/06/2020
04	04/06/2020						
03	28/05/2020						REVISED AS PER TCE & IOCL COMMENTS DT 28/05/2020
02	23/05/2020						REVISED AS PER TCE & IOCL COMMENTS DT 04/05/2020
01	29/04/2020						REVISED AS PER TCE & IOCL COMMENTS DT 19/03/2020

CUSTOMER: LSTK JOB FOR ISBL WORK OF 220kV GRID POWER IMPORT AT PANIPAT REFINERY
LOA NO. RPRC182491/26286965 DTD.24.01.2020

OWNER: INDIAN OIL CORPORATION LIMITED

CONSULTANT: TATA CONSULTING ENGINEERS LIMITED

BHARAT HEAVY ELECTRICALS LTD. TRANSMISSION BUSINESS GROUP

	NAME	SIGN.	DATE
DRN.	RD		12.03.2020
CHD.	RD		12.03.2020
APPD.	VK		12.03.2020

DEPT.	UNTOL. DIMS.	SCALE	WEIGHT (KG)	REF. TO ASSY. DRG.	ITEM NO.	NO.OF ITEMS
TBEM / CODE 411	GR. G/M/F	N.T.S	N.A.	N.A.	N.A.	N.A.

TITLE: 220/33KV SWITCHYARD- KEY METERING & PROTECTION SINGLE LINE DIAGRAM

DRAWING/ DOCUMENT NO. TB-3-411-510-002 REV. 04

SHT. No 08 NO. OF SHT. 08

SIZE-A3

FIRST ANGLE PROJECTION (ALL DIMENSIONS ARE IN MM.)

THE INFORMATION ON THIS DOCUMENT IS THE PROPERTY OF BHARAT HEAVY ELECTRICALS LIMITED. IT MUST NOT BE USED DIRECTLY OR INDIRECTLY IN ANY WAY DETRIMENTAL TO THE INTEREST OF THE COMPAY

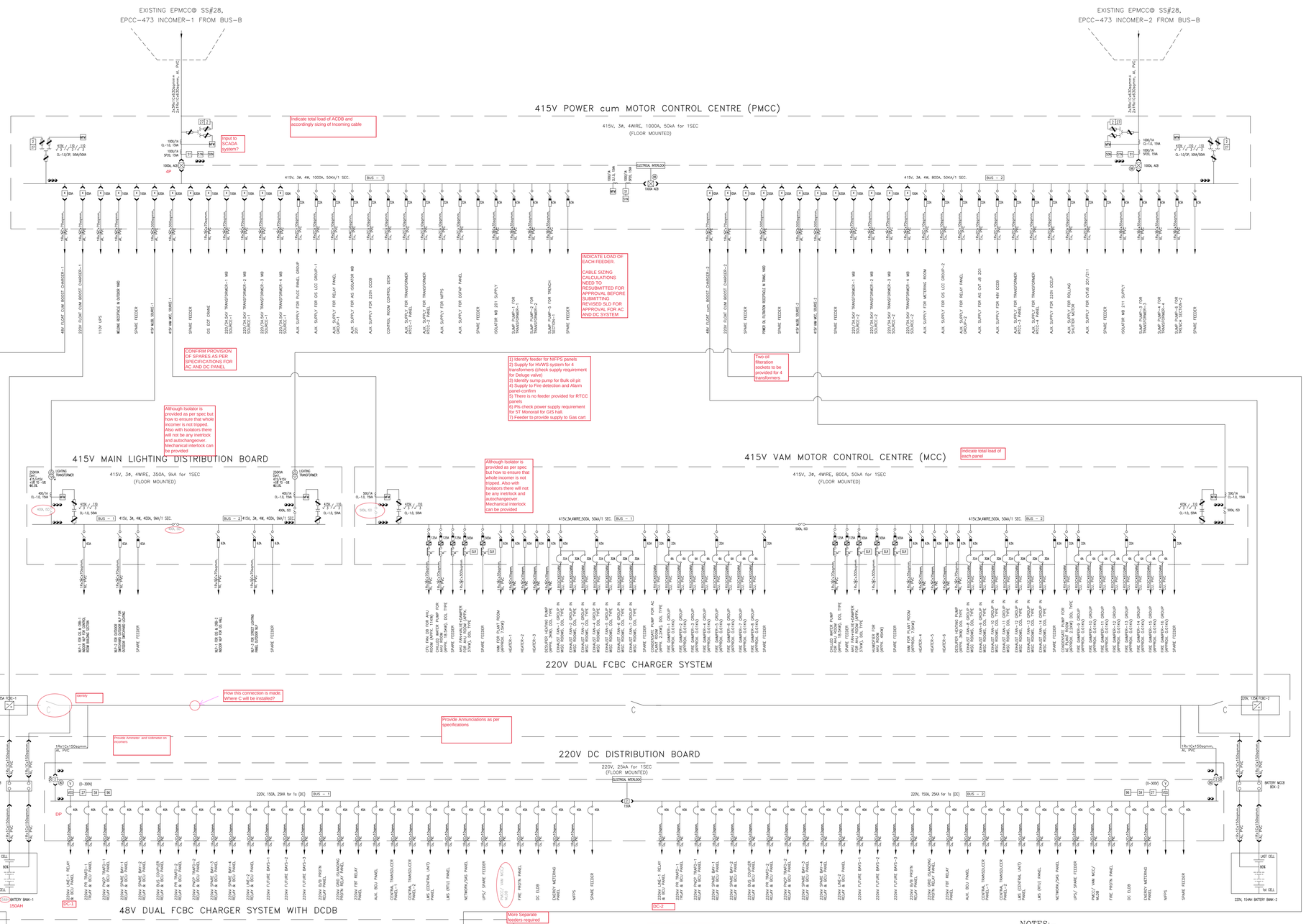

Minimum indicative requirement of Analog signals , Potential Free contacts & Command signals which should be available at respective equipment for remote indication & control from Auxiliary BCU located in S/s control room

EQUIPMENT	ANALOG INDICATION	POTENTIAL FREE CONTACT	COMMAND SIGNALS
415V PMCC			
	BUS 1 Voltage R-Y	Main I/C-1 Breaker ON/OFF	I/C-1 Breaker TRIP CMD
	BUS 1 Voltage Y-B	Main I/C-2 Breaker ON/OFF	I/C-1 Breaker CLOSE CMD
	BUS 1 Voltage B-R	Main B/C Breaker ON/OFF	I/C-2 Breaker TRIP CMD
	I/C-1 Current R Phase	Main Bus 1 UV	I/C-2 Breaker CLOSE CMD
	I/C-1 Current Y Phase	Main Bus 2 UV	B/C Breaker TRIP CMD
	I/C-1 Current B Phase		B/C Breaker CLOSE CMD
	BUS 2 Voltage R-Y		
	BUS 2 Voltage Y-B		
	BUS 2 Voltage B-R		
	I/C-2 Current R Phase		
	I/C-2 Current Y Phase		
	I/C-2 Current B Phase		
220V & 48V DCDB			
	DCDB Section-1 Voltage	DCDB Section-1 E/F ALARM	
	DCDB Section-2 Voltage	DCDB Section-2 E/F ALARM	
	Incomer-1 Current from Battery set-1		
	Incomer-1 Current from Battery Charger-1		
	Incomer-2 Current from Battery set-2		
	Incomer-2 Current from Battery Charger-2		
220V & 48V BATTERY CHARGER			
		CHARGER-1 : AC power failure	
		CHARGER-1: Rectifier/chargers fuse blown	
		CHARGER-1 : Over voltage across the battery when boost charging	
		CHARGER-1 : Abnormal voltage (High/Low)	
		CHARGER-1 : FLOAT MODE	
		CHARGER-1 : BOOST MODE	
		CHARGER-2 : AC power failure	
		CHARGER-2: Rectifier/chargers fuse blown	
		CHARGER-2 : Over voltage across the battery when boost charging	
		CHARGER-2 : Abnormal voltage (High/Low)	
		CHARGER-2 : FLOAT MODE	
		CHARGER-2 : BOOST MODE	

LEGEND:–

- DRAW OUT TYPE ACB
- DRAW OUT TYPE 4–POLE MCCB WITH CBCT & ELR
- DRAW OUT TYPE 2–POLE MCCB
- SFU WITH HRC FUSE
- ISOLATOR
- MCB
- BATTERY MCCB BOX
- CONTROL FUSE
- SFU, CONTACTOR, OLR WITH CBCT
- SFU, CONTACTOR, OLR WITH CBCT AND ELR/EMPR

LEGEND:–

50N	:	INSTANTANEOUS EARTH FAULT RELAY (Tripple pole)
50	:	TRIPLE POLE INSTANTANEOUS OVER CURRENT RELAY
51	:	DOUBLE POLE INVERSE DEFINITE MINIMUM TIME RELAY
50/2	:	SINGLE POLE ADJUSTABLE DEFINITE TIME DELAY RELAY FOR MOTOR OVERLOAD ALARM
2	:	TIME DELAY PICKUP RELAY AC INSTANTANEOUS UNDER VOLTAGE RELAY
27	:	DC INSTANTANEOUS UNDER VOLTAGE RELAY
59	:	DC INSTANTANEOUS OVER VOLTAGE RELAY
96	:	EARTH LEAKAGE RELAY
MFM	:	MULTI FUNCTION METER
86	:	MASTER TRIP RELAY
80	:	DC SUPERVISION RELAY

ABBREVIATIONS:–

ACB	:	AIR CIRCUIT BREAKER
CT	:	CURRENT TRANSFORMER
PT	:	POTENTIAL TRANSFORMER
MCC	:	MOTOR CONTROL CENTER
MCCB	:	MOULDED CASE CIRCUIT BREAKER
PMCC	:	POWER CUM MOTOR CONTROL CENTER
MLDB	:	MAIN LIGHTING DISTRIBUTION BOARD
PCC	:	POWER CONTROL CENTER
NO	:	NORMALLY OPEN CONTACT
NC	:	NORMALLY CLOSE CONTACT
PLC	:	PROGRAMMABLE LOGIC CONTROL
SFU	:	SWITCH FUSE UNIT

NOTES:–

1. NO TWO AC SOURCE SHALL BE PARALLELED AT ANY STAGE.
2. CABLE SIZES SHOWN ARE AS PER AUX. CABLE SIZING.
3. ALL THE FEEDERS SHOWN IN THE SLD INCLUDING SPARE AND OTHER ACCESSORIES ARE INCLUDED IN SCOPE OF SUPPLY.
4. ALL DIGITAL/ANALOG INPUTS/OUTPUTS REQUIRED FOR SAS SHALL BE CONSIDERED AND ACCORDINGLY, TRANSDUCERS/ AUX. CONTACTS REQUIRED FOR ANALOG AND DIGITAL INPUTS/ OUTPUT SHALL BE AN INTEGRAL PART OF INDIVIDUAL PANELS.
5. EACH MCCB SHALL BE PROVIDED WITH MINIMUM 1NO+1NC AUXILIARY CONTACT AND 1NO CONTACT FOR TRIPPING INDICATION/ALARM.
6. GLAND PLATE SHALL BE OF NON MAGNETIC WHEREVER SINGLE CORE POWER CABLE ARE USED.
7. INCOMING & OUTGOINGS CABLES SHALL HAVE BOTTOM ENTRY.
8. RATING OF BUSBAR/FEEDER INDICATED IN THIS DRAWING ARE MIN. REQUIREMENT AND MAY BE INCREASED DURING DETAILED ENGINEERING IF FOUND INADEQUATE WITH RESPECT TO OFFERED LOADS/ SYSTEM.
9. SWITCHBOARDS SHALL BE CONTINUOUSLY RATED & DESIGNED FOR OPERATION AT AN AMBIENT TEMPERATURE OF 45 DEG C. ANY OUTDOOR EQUIPMENT/ITEM TO BE DESIGNED FOR 50 DEG C.
10. AT LEAST ONE SPARE FEEDER FOR EACH TYPE OF OUTGOING FEEDERS ARE CONSIDERED.
11. THE RATING OF REMOTE END PANELS FOR PMCC INCOMER FEEDER IS CONSIDERED SUITABLE AS PER CUSTOMER CONFIRMATION.
12. BREAKER BASED SYSTEM IS PROVIDED IN PMCC PANEL.
13. SWITCHBOARD SHALL HAVE DEGREE OF PROTECTION NOT LESS THAN IP–41
14. FOR VAM MCC, ALL THE FEEDERS SHALL HAVE PROVISION FOR ITS INTERLOCKING WITH MICROPROCESSOR BASED PLC PANEL
15. INDICATING LAMPS FOR RYB PHASE, BREAKER ON/OFF, BREAKER AUTO TRIP, SPRING CHARGE, TRIP CIRCUIT HEALTHY, DC CIRCUIT HEALTHY SHALL BE PROVIDED IN BEAKER FEEDERS ALONG WITH PUSH BUTTONS' PB.
16. BREAKER CONTROL SWITCH, LOCAL/REMOTE SELECTOR SWITCH SHALL BE PROVIDED IN INCOMMER/ BUS COUPLER OF PMCC PANEL.
17. ONE NO. OF DC SUPPLY SUPERVISION RELAY (80) SHALL BE PROVIDED FOR EACH INCOMING DC SUPPLY TO DCDB.
18. ON/OFF INDICATION SHALL BE PROVIDED IN DCDB. IN ADDITION TO THIS, ANNUNCIATOR WINDOW & HOOTER, IF REQUIRED SHALL ALSO BE PROVIDED FOR TO BE SHOWN

TATA CONSULTING ENGINEERS LIMITED VENDOR DOCUMENT REVIEW STATUS

- ☐ A. Document approved as submitted; proceed with fabrication/construction.
- ☐ B. Document approved subject to comments noted; proceed with fabrication/construction considering our comments.
- ☑ C. Our comments are noted on this marked up print.
- ☐ D. Our comments are noted in the memo attached to the forwarding transmittal Letter No. ____ Dated ____
- ☑ E. Correct original of this document to reflect our comments and resubmit for approval.
- ☐ F. Correct original of this document to reflect our comments and resubmitted for records.
- ☐ G. Document of this category are for information only and not for approval. Information furnished on the document is noted.
- ☐ H. Document reviewed against our previous comments and other revisions highlighted and identified by the vendor.
- ☐ I. Document returned without review.

Approval conveyed herein neither relieves Vendor/Contractor of his contractual obligations and his responsibilities for correctness of dimensions, materials of construction, weights, quantities, design details, assembly fits, system/performance requirements and conformity of supplies with Indian Statutory Laws as may be applicable, nor does it limit the Purchaser's rights under the contract.

Reviewed by AKN Date 23-06-2021

TATA CONSULTING ENGINEERS LIMITED MUMBAI

REFERENCE DRAWING (S)/ DOCUMENT(S) –

SL. NO.	DRAWING/ DOCUMENT NO.	DRAWING TITLE
01.	TB–411–316–056	Auxiliary Cable Sizing Calculations

PROJECT: LSTK JOB FOR ISBL WORK OF 220kV GRID POWER IMPORT AT PANIPAT REFINERY
LOA NO. RPRC1B2491/26286965 DTD.24.01.2020

OWNER: INDIAN OIL CORPORATION LIMITED

CONSULTANT: TATA CONSULTING ENGINEERS LIMITED

भारत हेवी इलेक्ट्रिकल्स लिमिटेड
दूरसंचरण परियोजना विभाग
BHARAT HEAVY ELECTRICALS LTD.
TRANSMISSION PROJECTS DIVISION

	NAME	SIGN.	DATE
DRN.	PK		30.07.2020
CHD.	DKS/RD		30.07.2020
APPD.	VK		30.07.2020

REV.	DATE	ALTERED	CHD
01	16.06.21	PK	DKS/RD
		APPD	VK

ZONE: AS PER CONSULTANT/CUSTOMER COMMENTS DTD.03.08.2021 & 09.05.2020

DEPT: TBEM | CODE: 411 | UNTOL. DIMS. OR. C/M/F | SCALE: N.T.S | WEIGHT (KG): N.A. | REF. TO ASSY. DRG.: N.A. | ITEM NO.: N.A. | NO.OF ITEMS: N.A.

TITLE: 220/33KV SWITCHYARD– SINGLE LINE DIAGRAM FOR AUXILLARY POWER SYSTEM

DRAWING/ DOCUMENT NO.: TB–411–510–003 | REV.: 01 | SHT. No 01 | NO. OF SHT. 01

SIZE–A0

FIRST ANGLE PROJECTION (ALL DIMENSIONS ARE IN MM.)

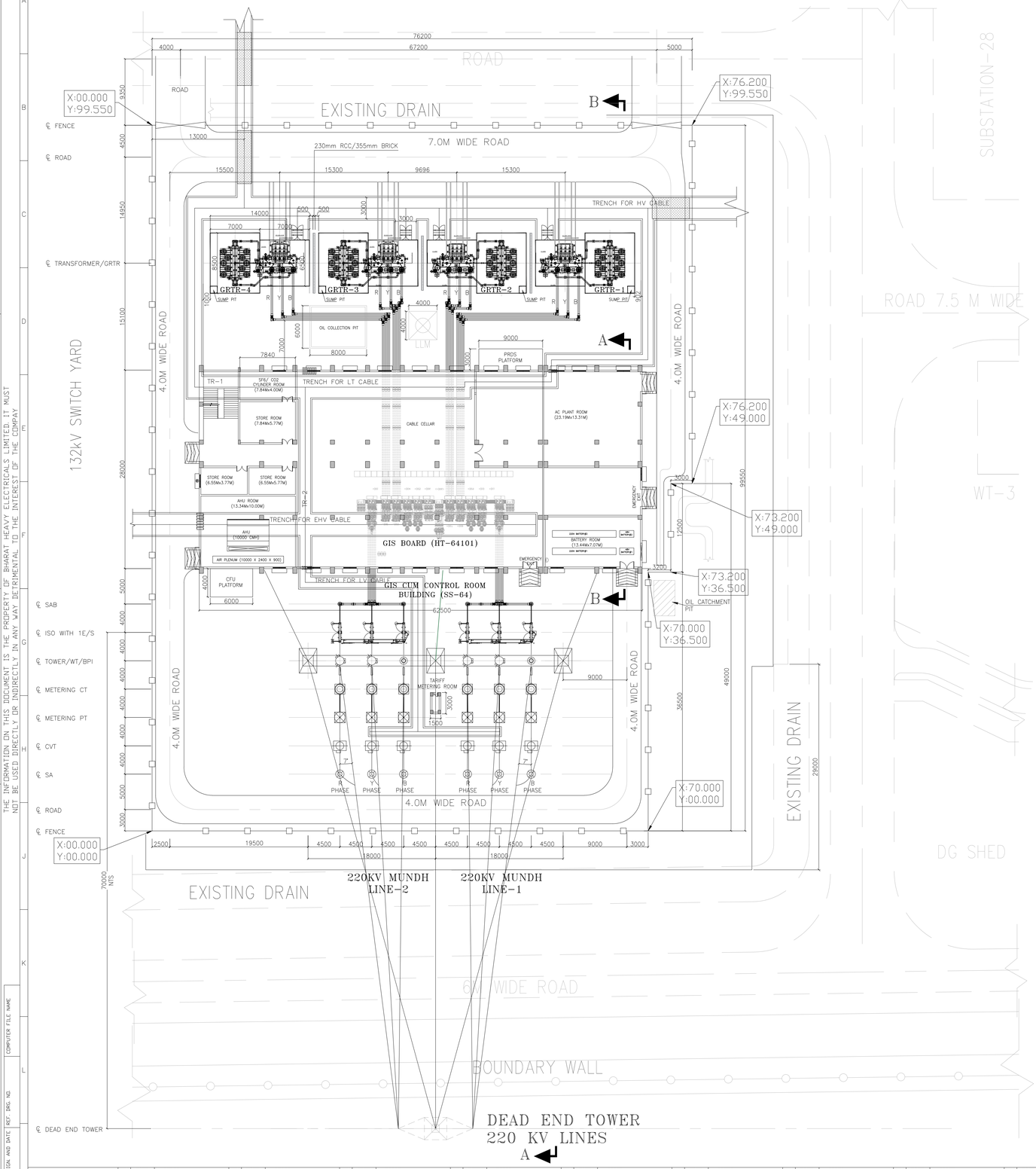

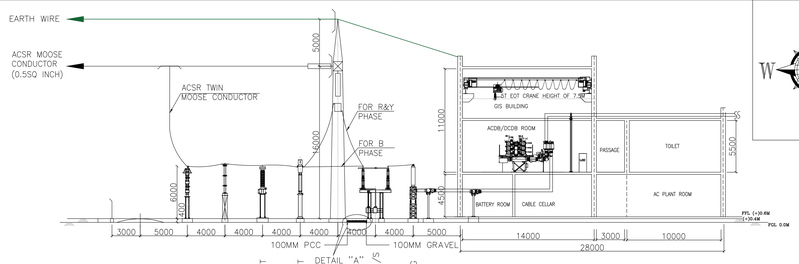

SECTION A-A (LINE BAY)

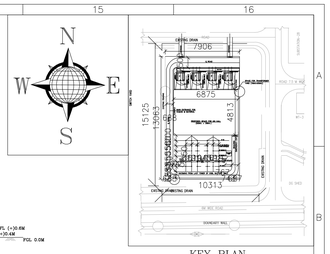

KEY PLAN

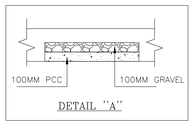

DETAIL "A"

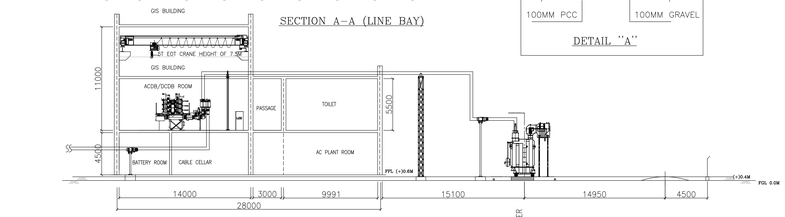

SECTION B-B (TRANSFORMER BAY)

BHEL
RELEASED FOR CONSTRUCTION
DESTROY EARLIER PRINTS
SIGNED DKS | DATE 21.01.21
Transmission Business Engineering Management

1. STRINGING/ CONDUCTOR DETAILS

SL.NO	DESCRIPTION	220KV	33KV
01	JUMPER FROM LINE CONDUCTOR	TWIN/SINGLE MOOSE CONDUCTOR	--
02	OUTDOOR EQUIPMENT INTERCONNECTION	TWIN/SINGLE MOOSE CONDUCTOR	--
03	GALVANIZED SHIELD WIRE	7/3.66mm DIA	--
04	OUTDOOR EQUIPMENT TO GIS CONNECTION	BUS DUCT	--
05	GIS CONNECTION TO TRANSFORMER PRIMARY CONNECTION	BUS DUCT	--
06	TRANSFORMER SECONDARY CONNECTION	--	XLPE CABLE

2. SYSTEM PARAMETERS

SL.NO	DESCRIPTION	UNITS	220KV	33KV
01	NORMAL SYSTEM VOLTAGE	KV	220	33
02	HIGHEST SYSTEM VOLTAGE	KV	245	36
03	POWER FREQUENCY WITHSTAND	kVrms	460	75
04	LIGHTING IMPULSE WITHSTAND VOLTAGE	kVp	1050	170
05	SYSTEM FAULT LEVEL	KA	50kA/3sec	31.5kA/1sec
06	CREEPAGE DISTANCE (MIN)	mm	25MM/KV (6125)	25MM/KV (900)
07	MINIMUM CLEARANCE			
(a)	PHASE TO PHASE (PP) CLEARANCE	mm	2100	350
(b)	PHASE TO EARTH (PE) CLEARANCE	mm	2100	320
(c)	SECTION CLEARANCE (SC)	mm	5000	--
(d)	GROUND CLEARANCE TO NEAREST PART NOT AT EARTH POTENTIAL OF AN INSULATOR SUPPORTING LIVE CONDUCTOR	mm	5500	--

3. SCHEDULE OF EQUIPMENT

SL.NO.	LEGEND	DESCRIPTION	UNIT	QTY
01		198kV, 10kA, CLASS-III, 1 PHASE SURGE ARRESTER (SA)	NO	6
02		220kV, 8800pF, 1 PHASE CAPACITOR VOLTAGE TRANSFORMER (CVT)	NO	6
03		220KV, 1 PHASE WAVE TRAP, 2000A, 1mH	NO	4
04		220KV, 1 PHASE TARIFF METERING PT	NO	6
05		220KV, 1 PHASE TARIFF METERING CT	NO	6
06		220kV, 6 KN, 1 PHASE, BUS POST INSULATOR	SET	2
07		220kV, 2000A, 3X1 PHASE, HCB ISOLATOR (ELECTRICALLY OPERATED MECHANICALLY GANGED) WITH ONE EARTH SWITCH (ELECTRICALLY OPERATED MECHANICALLY GANGED)	SET	2
08		SF6 TO AIR BUSHING	NO	6
09		SF6 TO OIL BUSHING	NO	12
10		220KV GIS BUS DUCT	LOT	1
11		220/34.5kV, 50/65MVA, ONAN/ONAF YNyn0, 3 PHASE TRANSFORMER	NO	4
12		FIRE ISOLATION WALL (8500mm(L)x7800mm(H))	NO	3
13		220KV TOWER	NO	3
14		220kV BEAM	NO	2
15		LLM-LIGHTING CUM LIGHTNING MAST@	NO	1

"@" SUBJECT TO DSLP CALCULATIONS.

NOTES

1. ALL DIMENSIONS ARE IN MM.
2. GIS BUILDING CUM CONTROL ROOM SIZE AND ARRANGEMENT ARE INDICATIVE ONLY. EXACT SIZE AND ARRANGEMENT SHALL BE SHOWN IN SEPARATE DRAWING FOR GIS BUILDING CUM CONTROL FROM BUILDING.
3. EXACT CABLE ROUTING & LAYING OF 33KV XLPE CABLE SHALL BE SHOWN IN SEPARATE DRAWING FOR CABLE TRENCH LAYOUT.
4. FOR EXACT DIMENSIONS & OTHER DETAILS OF EQUIPMENT, RESPECTIVE EQUIPMENT DRAWING SHALL BE REFERRED.
5. THE LOCATION OF DC TOWER SHALL BE AS PER DRAWING, HOWEVER, LINE & PHASE SEQUENCE IS FINALIZED BASED ON FINAL CONFIRMATION FROM CUSTOMER (IOCL/ HVPNL).
6. GIS BAY SEQUENCE IS TENTATIVE AND MAY CHANGE IN LINE WITH THE TECHNICAL REQUIREMENTS INCLUDING SERVICE CONTINUITY.
7. COMMON TARIFF METERING ROOM (1NO) SHALL BE PROVIDED FOR BOTH INCOMER LINES.
8. CT/ VT PARAMETERS SHALL BE DETAILED IN SEPARATE DRAWING (KEY PROTECTION SINGLE LINE DIAGRAM).
9. LIGHTNING PROTECTION SHALL BE PROVIDED WITH LLM/SHIELD WIRE.
10. THE REQUIRED CLEARANCES ARE AS PER CLEARANCE TABLE ABOVE AND AS PER PROVISION OF IE RULES & OTHER STATUTORY REGULATIONS, HOWEVER CLERANCE OF BUS DUCTS FROM BUILDING ARE IN LINE WITH CBIP GUIDELINES.
11. SWITCHYARD LIGHTING FIXTURES SHALL BE PROVIDED ON LLM/TOWER/BUILDING.
12. IN GENERAL, TOWER & GANTRY SHALL BE DESIGNED AS IN LINE WITH HVPNL DESIGN.
13. CONDUCTOR & SHIELD WIRE FROM DEAD END TOWER SHALL BE TERMINATED AT BEAM/ GANTRY OF SWITHTYARD TOWER BY (HVPNL/IOCL) FOR WHICH ANCHORING POINT SHALL BE PROVIDED BY BHEL.
14. PEDESTRAL OF TOWER AND EQUIPMENT SHALL BE 400MM ABOVE FROM FGL WHEREAS FFL OF GIS CUM CONTROL ROOM BUILDING SHALL BE 600MM FROM FGL.
15. THE FINSHED FLOOR LEVEL (FFL) WITH A TOERANCE OF (+/-) 100MM SHALL BE MAINTAINED AS EQUAL TO FFL OF NEARST SUBSTATION (SS)-28.

LEGEND

EXISTING LINE
FENCING LINE
ACSR CONDUCTOR
EARTH WIRE

REFERENCE DRAWING(S)/DOCUMENT(S) -

SL. NO.	DRAWING/ DOCUMENT NO.	DRAWING TITLE
4.	TB-411-316-071-03	TRANSFORMER- FOUNDATION PLAN OF 220/34.5KV TRANSFORMER
3.	TB-411-316-071-01	TRANSFORMER- OUTLINE GENERAL ARRANGEMENT OF 220/34.5KV TRANSFORMER
2.	TENDER DRAWING NO-4165.	INDICATIVE GELO OF 220KV SWITCH YARD
1.	TB-411-510-001	220/33kV SWITCHYARD- SINGLE LINE DIAGRAM

PROJECT: LSTK JOB FOR ISBL WORK OF 220kV GRID POWER IMPORT AT PANIPAT REFINERY
LOA NO. RPRCIB2491/26286965 DTD.24.01.2020

OWNER: INDIAN OIL CORPORATION LIMITED

CONSULTANT: TATA CONSULTING ENGINEERS LIMITED

भारत हेवी इलेक्ट्रिकल्स लिमिटेड
पारेषण प्रभाग परियोजना विभाग
BHARAT HEAVY ELECTRICALS LTD.
TRANSMISSION PROJECTS DIVISION

	NAME	SIGN.	DATE
DRN.	PK	-sd-	05.02.2020
CHD.	DKS	-sd-	05.02.2020
APPD.	VK	-sd-	05.02.2020

DEPT. ITEM CODE	UNTOL. DIMS. OR C/M/F	SCALE	WEIGHT (KG)	REF. TO ASSY. DRG.	ITEM NO.	NO.OF ITEMS
411		N.T.S	N.A.	N.A.	N.A.	N.A.

TITLE: 220/33KV SWITCHYARD- LAYOUT PLAN & SECTION

DRAWING/ DOCUMENT NO. TB-411-316-011 REV. 07
SHT. No 01 NO. OF SHT. 01

REV.	DATE	ALTERED	
07	04.09.20	CHD DKS / APPD VK	AS PER SITE/CUSTOMER COMMENTS DTD. 31.08.2020, 01.09.2020, 02.09.2020.
06	20.07.20	CHD DKS / APPD VK	AS PER CONSULATNT/TCE AND CUSTOMER/IOCL COMMENTS DTD. 02.07.2020 AND FURTHER REVISED INPUT FROM BHEL, JHANSI.
05	25.06.20	CHD DKS / APPD VK	AS PER CONSULATNT/TCE AND CUSTOMER/IOCL COMMENTS DTD. 09.05.2020 AND FURTHER REVISED INPUT FROM BHEL, JHANSI.
04	08.05.20	CHD DKS / APPD VK	AS PER CONSULATNT/TCE AND CUSTOMER/IOCL COMMENTS DTD. 04.04.2020 & 06.05.2020 RESPECTIVELY.
03	27.04.20	CHD DKS / APPD VK	AS PER TCE/IOCL COMMENTS DTD. 23.03.2020 & 22.04.2020 RESPECTIVELY.
02	14.04.20	CHD DKS / APPD VK	AS PER TCE/IOCL COMMENTS DTD. 30.03.2020.
01	14.02.20	CHD DKS / APPD VK	AS PER HVPNL/IOCL COMMENTS ON DTD. 13.02.2020 IN HVPNL OFFICE.

THE INFORMATION ON THIS DOCUMENT IS THE PROPERTY OF BHARAT HEAVY ELECTRICALS LIMITED. IT MUST NOT BE USED DIRECTLY OR INDIRECTLY IN ANY WAY DETRIMENTAL TO THE INTEREST OF THE COMPAY

INVENTORY NO | SIGN. AND DATE | REF. DRG. NO. | COMPUTER FILE NAME

SIZE-A0

FIRST ANGLE PROJECTION (ALL DIMENSIONS ARE IN MM.)

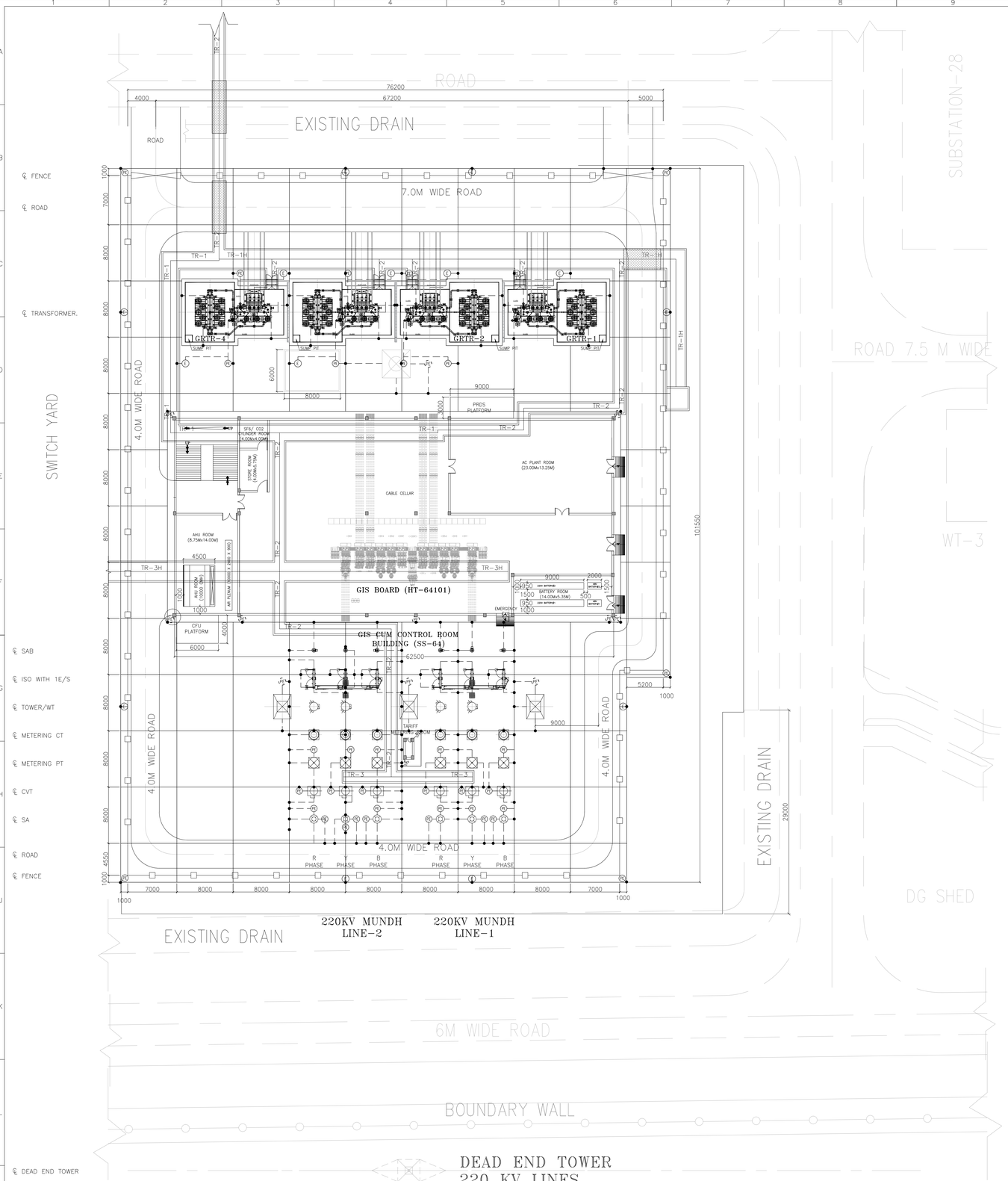

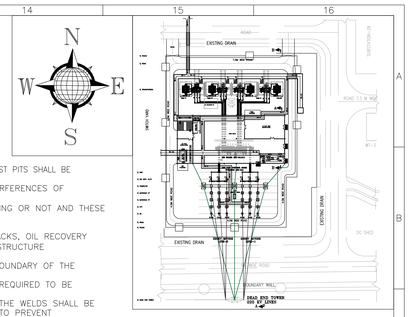

KEY PLAN

NOTES:-

1. ALL DIMENSIONS ARE IN MM UNLESS OTHERWISE SPECIFIED.
2. THE EQUIPMENT EARTHING CONNECTIONS SHOWN ARE DIAGRAMMATIC ONLY. EXACT LOCATION OF EQUIPMENT EARTHING LEADS, EARTH ELECTRODES & TEST PITS SHALL BE INSTALLED TO SUIT SITE CONDITIONS.
3. ROUTING OF GROUNDING CONDUCTOR IS DIAGRAMMATIC ONLY AND HENCE, MARGINAL SHIFTING OF GROUNDING CONDUCTOR TO AVOID INTERFERENCES OF STRUCTURE/FOUNDATION. CABLE TRENCHES, BUILDING ETC. SHALL BE DONE AT SITE TO SUIT SITE CONDITIONS.
4. ALL EQUIPMENT AND STRUCTURES SHALL, IN GENERAL, BE GROUNDED AT TWO POINTS AT OPPOSITE CORNERS WHETHER SHOWN IN DRAWING OR NOT AND THESE SHALL BE CONNECTED TO DIFFERENT PARTS OF THE GROUNDMAT WHEREVER POSSIBLE.
5. GROUNDING CONDUCTORS IN OUTDOOR AREAS SHALL BE BURIED 600MM BELOW FINISHED GROUND LEVEL.
6. WHENEVER A GROUNDING CONDUCTOR CROSSES ROADS, CABLE TRENCHES, UNDERGROUND SERVICE DUCTS, PIPES, TUNNELS, RAILWAY TRACKS, OIL RECOVERY TANKS, TRANSFORMER SOAK PIT ETC. IT SHALL BE LAID AT LEAST 300MM BELOW THEM, SHALL BE REROUTED ROUND THE EQUIPMENT/STRUCTURE FOUNDATIONS.
7. GROUNDING CONDUCTOR AROUND THE BUILDING SHALL BE BURIED IN GROUND AT A MINIMUM DISTANCE OF 2000MM FROM THE OUTER BOUNDARY OF THE BUILDING.
8. GROUNDING CONDUCTORS EMBEDDED IN CONCRETE SHALL HAVE APPROXIMATELY 50MM CONCRETE COVER. IF GROUNDING CONDUCTOR IS REQUIRED TO BE EMBEDDED IN MAJOR FOUNDATIONS, THEN IT SHALL BE LAID IN A SLEEVE.
9. CONNECTION BETWEEN EQUIPMENT GROUNDING LEADS AND MAIN GROUND CONDUCTORS SHALL BE WELDED TYPE FOR RUST PROTECTION, THE WELDS SHALL BE CLEANED WITH WIRE BRUSH, TREATED WITH RED LEAD PRIMER AND AFTERWARDS THICKLY COATED WITH TWO COATS BITUMEN COMPOUND TO PREVENT CORROSION.
10. ALL GROUND CONNECTIONS SHALL BE MADE BY ELECTRIC ARC WELDING. ALL WELDED JOINTS SHALL BE ALLOWED TO COOL DOWN GRADUALLY TO ATMOSPHERIC TEMPERATURE BEFORE PUTTING ANY LOAD ON THEM. ARTIFICIAL COOLING SHALL NOT BE ALLOWED.
11. BENDING OF LARGE EARTHING ROD SHALL BE DONE PREFERABLE BY GAS HEATING.
12. ALL ARC WELDING OF LARGE DIAMETER CONDUCTORS SHALL BE DONE BY LOW HYDROGEN CONTENT ELECTRODES.
13. LOCATION OF ROD ELECTRODE & PIPE ELECTRODE ARE SHOWN TENTATIVELY, AND HENCE, ELECTRODES SHALL BE LOCATED NEAREST TO RESPECTIVE EQUIPMENT, AS POSSIBLE.
14. THE ELECTRODES SHALL BE AS DETAILED BELOW FOLLOWING TABLE.
15. GROUNDING CONDUCTORS ALONG THEIR RUN ON CABLE TRENCH, LADDER, COLUMN, BEAMS, WALLS, ETC. SHALL BE SUPPORTED BY SUITABLE WELDING/ CLEATING AT INTERVALS OF 750 MM. GROUNDING CONDUCTORS ALONG CABLE TRENCHES SHALL BE ON THE WALL NEAR TO THE EQUIPMENT WHERE EVER GALVANIZED IRON ENDS OF THE SLEEVES SHALL BE PROVIDED FOR THE PASSAGE OF THE CONDUCTOR. BOTH ENDS OF THE SLEEVES SHALL BE SEALED TO PREVENT THE PASSAGE OF WATER THROUGH THE SLEEVES
16. ALL STEEL COLUMNS, METALLIC STAIRS ETC. SHALL BE CONNECTED TO THE NEAREST GROUNDING CONDUCTOR BY GROUNDING LEADS. ELECTRICAL CONTINUITY SHALL BE ENSURED BY BONDING THE DIFFERENT SECTION OF HAND RAILS AND METALLIC STAIRS.
17. METALLIC PIPES, CONDUITS AND CABLE TRAY SECTION FOR CABLE INSTALLATION SHALL BE BONDED TO ENSURE ELECTRICAL CONTINUITY AND CONNECTED TO THE GROUNDING CONDUCTOR AT NOT MORE THAN 10 MTRS INTERVALS. APART FROM INTERMEDIATE CONNECTION, BOTH ENDS SHALL ALSO BE CONNECTED TO THE GROUNDING SYSTEM.
18. A SEPARATE GROUNDING CONDUCTOR SHALL BE PROVIDED FOR GROUNDING LIGHTING FIXTURES, RECEPTACLES, SWITCHES, JUNCTION BOXES, LIGHTING CONDUITS ETC.
19. WHEREVER GROUNDING CONDUCTORS CROSSES OR RUNS ALONG METALLIC STRUCTURES SUCH AS GAS/WATER/STEAM CONDUIT/PIPES ETC. AND STEEL OF CONCRETE IT SHALL BE BONDED TO THE SAME.
20. LIGHTING POLES, JUNCTION BOXES ON THE POLES CABLE BOXES/ GLANDS, LOCKOUT SWITCHES ETC. SHALL BE CONNECTED TO THE GROUNDING CONDUCTOR RUNNING ALONGWITH THE SUPPLY CABLE WHICH, INTURN, SHALL BE CONNECTED TO THE GROUNDING GRID CONDUCTOR AT LEAST TWO POINTS.
21. 50x6MM GALVANISED STEEL FLAT SHALL BE USED FOR EARTHING OF CABLE TRENCHES & CONTROL PANELS. ALL TRENCHES SHALL BE EARTHED AT INTERVALS OF 30 MTRS. ALONG THE LENGTH OF THE TRENCH AND AT ALL ENDS OF THE TRENCHES. RISER SHALL BE PROVIDED FOR TRENCH EARTHING AT EVERY 30 MTRS AND AT ALL ENDS, IF MAIN GROUNDING CONDUCTOR IS NOT AVAILABLE IN TRENCH ROUTE. ROD ELECTRODE SHALL BE PROVIED FOR TRENCH EARTHING..
22. FOR DETAILED EARHING, FROUNDING DETAILS FOR EQUIPMENT, FENCE, GATE, ETC., REFER RESPECTIVE EQUIPMENT EARTHING DRAWING.
23. THE RISER CONNECTION TO EARTHMAT WILL BE 40mm DIA ROD. THE RISER TO EQUIPMENT CONNECTION WILL BE BY 75x12mm G.I. FLAT
24. EARTHMAT SHOULD BE BURIED 1000mm BEYOND FENCE ON ALL SIDES. ALL GATES AND EVERY ALTERNATE POST OF FENCE SHALL BE CONNECTED TO EARTHING GRID.
25. GROUNDING CONDUCTOR ALONG THE LENGTH OF ROAD SHALL BE LAID IN SUCH A MANNER THAT DRAIN IS NOT FOULING WITH MAIN CONDCUTOR.
26. ALL EARTHING CONNECTIONS BETWEEN EARTHING LEAD AND EQUIPMENT EARTHING TERMINAL SHALL BE BOLTED AND OTHER CONNECTIONS SHALL BE WELDED TYPE.
27. EARTHING FOR THE SWITCHYARD SHALL BE CARRIED OUT IN ACCORDANCE WITH IS:3043, IEEE 1100, IEEE 80 & IE RULES.
28. PREFERRED DISTANCE BETWEEN TWO ADJACENT ELECTRODE IS 6.0 M MINIMUM. EXACT LOCATIONS AFTER INTERFERENCE CHECKS TO BE DECIDED AT SITE.
29. JOINTS SHALL BE AVOIDED AS FAR AS POSSIBLE. JOINTS SHALL BE MINIMUM FOR TRANSFORMER/REACTOR NEUTRAL CONNECTION TO EARTHING PIT TO MINIMIZE EARTH IMPEDANCE.
30. WAVETRAP EARTHING SHAL BE AS PER OEM DRAWINGS.
31. THE EARTHING LAYOUT FOR PR CPP EXTENSION CONTROL ROOM SHALL ALSO BE IN LINE WITH THIS LAYOUT DRAWING.

DETAILS OF EARTH ELECTRODES & MS ROD

Sl. No.	DESCRIPTION OF EQUIPMENT/ BUILDING	LEGENDS	EQUIPMENT/ STRUCTURE	PIPE ELECTRODE IN TREATED PIT WITH TEST LINK	PIPE ELECTRODE IN TREATED PIT WITHOUT TEST LINK	EARTH ROD ELECTRODES IN NON-TREATED TEST PIT WITHOUT TEST LINK	TOTAL
A	PIPE ELECTRODE IN TREATED PIT WITH TEST LINK	PE					
1	POWER TRANSFORMER'S NEUTRAL		04 NOS	02 NOS			08 NOS
2	LIGHTING TRANSFORMERS' NEUTRAL		04 NOS	01 NOS			04 NOS
3	MAIN EARTH GRID CORNER		05 NOS	01 NOS			05 NOS
4	SURGE ARRESTER		06 NOS	02 NOS			12 NOS
5	CAPACITOR VOLTAGE TRANSFORMER		06 NOS	01 NOS			06 NOS
6	POTENTIAL TRANSFORMER		06 NOS	01 NOS			06 NOS
B	PIPE ELECTRODE IN TREATED PIT WITHOUT TEST LINK	PE				SUB-TOTAL (Nos.):	41 NOS
1	GIS CUM CONTROL ROOM BUILDING		01 NOS		04 NOS		04 NOS
2	TARIFF METERING ROOM		01 NOS		02 NOS		02 NOS
3	LIGHTING CUM LIGHTNING MAST (LLM)		01 NOS		01 NOS		01 NOS
4	LIGHTNING MAST (LM)		02 NOS		01 NOS		02 NOS
5	SHIELD WIRE DOWN CONDUCTOR NEAR GIS BUILDING		03 NOS		01 NOS		03 NOS
6	SHIELD WIRE DOWN CONDUCTOR FOR TOWER WITH PEAK		03 NOS		01 NOS		03 NOS
C	EARTH ROD ELECTRODES IN NON-TREATED PIT WITHOUT TEST LINK	E				SUB-TOTAL (Nos.):	15 NOS
1	GRID PERIPHERY (OTHER THAN GRID CORNER)-2NOS. EACH SIDE		01 LOT			08 NOS	08 NOS
2	POWER TRANSFORMER'S NEUTRAL		04 NOS	02 NOS		08 NOS	08 NOS
D	AUXILIARY MAT					SUB-TOTAL (Nos.):	16 NOS
1	AUXILIARY MAT FOR ISOLATOR/ EARTH SWITCH		01 LOT				06 NOS
E	GI EARTH FLAT FOR ABOVE GROUND EARTHING						
1	75x12 GI FLAT		01 LOT				16T
2	50x6 GI FLAT		01 LOT				30T
F	MS ROD FOR BELOW GROUND CONDUCTOR						
1	40mm DIA MS ROD MAIN CONDUCTOR		01 LOT				50T
2	40mm DIA MS ROD RISER		01 LOT				
	MS rod below ground conductor for equipment earthing riser legend to be shown						

TATA CONSULTING ENGINEERS LIMITED
VENDOR DOCUMENT REVIEW STATUS
☐ A. Document approved as submitted; proceed with fabrication/construction.
☐ B. Document approved subject to comments noted; proceed with fabrication/construction considering our comments.
☐ C. Our comments are noted on this marked up print.
☐ D. Our comments are noted in the memo attached to the forwarding transmittal Letter No. ..... Dated .....
☐ E. Correct original of this document to reflect our comments and resubmit for approval.
☐ F. Correct original of this document to reflect our comments and resubmitted for records.
☐ G. Document of this category are for information only and not for approval. Information furnished on the document is noted.
☐ H. Document reviewed against our previous comments and other revisions highlighted and identified by the vendor.
☐ I. Document returned without review.
Approval conveyed herein neither relieves Vendor/Contractor of his contractual obligations and his responsibilities for correctness of dimensions, materials of construction, weights, quantities, design details, assembly fits, system/performance requirements and conformity of supplies with Indian Statutory Laws as may be applicable, nor does it limit the Purchaser's rights under the contract.
Reviewed by SRP/AKN Date 23.07.2020

BHEL
RELEASED FOR CONSTRUCTION
DESTROY EARLIER PRINTS
SIGNED DKS DATE 21.07.2021
Transmission Business - Engineering Management

REFERENCE DRAWING (S)/ DOCUMENT(S) -

SL. NO.	DRAWING/ DOCUMENT NO.	DRAWING TITLE
3.	TB-411-316-016	220/33KV SWITCHYARD- EQUIPMENT EARTHING PHILOSOPHY AND DETAILS
2.	TB-411-316-052	220/33KV SWITCHYARD- EARTHING DESIGN CALCULATIONS
1.	TB-411-316-011	220/33KV SWITCHYARD- LAYOUT PLAN & SECTION

PROJECT: LSTK JOB FOR ISBL WORK OF 220kV GRID POWER IMPORT AT PANIPAT REFINERY
LOA NO. RPRC1B2491/26286965 DTD.24.01.2020

OWNER: INDIAN OIL CORPORATION LIMITED

CONSULTANT: TATA CONSULTING ENGINEERS LIMITED

भारत हेवी इलेक्ट्रिकल्स लिमिटेड
पारेषण प्रभाग परियोजना विभाग
BHARAT HEAVY ELECTRICALS LTD. TRANSMISSION PROJECTS DIVISION

	NAME	SIGN.	DATE
DRN.	PK	-sd-	22.04.2020
CHD.	DKS	-sd-	22.04.2020
APPD.	VK	-sd-	22.04.2020

REV.	DATE	ALTERED	
03	21.07.20	PK	AS PER CONSULTANT/ CUSTOMER COMMENTS DTD. 01.07.2020 & 04.07.2020 RESPECTIVELY
02	27.06.20	PK	AS PER CONSULTANT/ CUSTOMER COMMENTS DTD. 22.06.2020 & 22.06.2020 RESPECTIVELY
01	21.06.20	PK	AS PER CONSULTANT/ CUSTOMER COMMENTS DTD. 27.04.20 & 30.04.20 RESPECTIVELY

DEPT. TERM CODE 411 | UNTOL. DIMS. OR C/M/F | SCALE N.T.S. | WEIGHT (KG) N.A. | REF. TO ASSY. DRG. N.A. | ITEM NO. N.A. | NO.OF ITEMS N.A.

TITLE: 220/33KV SWITCHYARD-EARTHING LAYOUT

DRAWING/ DOCUMENT NO. TB-411-316-015 REV. 03
SHT. No 01 NO. OF SHT. 01

SIZE-A0

THE INFORMATION ON THIS DOCUMENT IS THE PROPERTY OF BHARAT HEAVY ELECTRICALS LIMITED. IT MUST NOT BE USED DIRECTLY OR INDIRECTLY IN ANY WAY DETRIMENTAL TO THE INTEREST OF THE COMPAY

COMPUTER FILE NAME | SIGN AND DATE | REF. DRG. NO. | INVENTORY NO

INVENTORY No.	SIGN. & DATE	REF. DRG. No.	COMPUTER DRG. PATH NAME :

COPY RIGHT AND CONFIDENTIAL
The information on this document is the property of BHARAT HEAVY ELECTRICALS LIMITED
it must not be used directly or indirectly in anyway detrimental to the interest of the company.

DRAWING No. TB-411-316-016

220/33KV SWITCHYARD- EQUIPMENT EARTHING PHILOSOPHY AND DETAILS

BHEL

RELEASED FOR CONSTRUCTION
DESTROY EARLIER PRINTS

SIGNED DKS **DATE** 21.01.21

Transmission Business Engineering Management

COVER SHEET (02) + 22 = 24 SHEETS

REFERENCE DRAWING (S)/ DOCUMENT(S) -

SL.NO.	DRAWING/ DOCUMENT NO.	DRAWING TITLE
01	TB-411-316-015	220/33KV SWITCHYARD- EARTHING LAYOUT
02	TB-411-316-052	220/33KV SWITCHYARD- EARTHING DESIGN CALCULATIONS

WO/ LOA No. LOA NO. RPRC182491/26286965 DTD.24.01.2020

ADDITIONAL INFORMATION
W.O.No.

STATUS OF DRAWING

DISTRIBUTION OF PRINTS

NAME OF CUSTOMER: INDIAN OIL CORPORATION LIMITED
NAME OF PROJECT: LSTK JOB FOR ISBL WORK OF 220KV GRID POWER IMPORT AT PANIPAT REFINERY
NAME OF CONSULTANT: TATA CONSULTING ENGINEERS LIMITED

BHARAT HEAVY ELECTRICALS LTD.
TRANSMISSION PROJECTS DIVISION

	NAME	SIGN.	DATE
DRAWN	PK	-sd-	15.04.2020
CHECKED	DKS	-sd-	15.04.2020
APPROVED	VK	-sd-	15.04.2020

REV.	DATE	ALTERED	REV.	DATE	ALTERED	REV.	DATE	ALTERED
		CHECKED	02	05.08.20	PK	01	23.07.20	PK
		APPROVED			CHECKED DKS			CHECKED DKS
					APPROVED VK			APPROVED VK
ZONE			ZONE	AS PER CONSULTANT/ CUSTOMER COMMENTS DTD. 28.07.20 & 31.07.20 RESPECTIVELY		ZONE	AS PER CONSULTANT/ CUSTOMER COMMENTS DTD. 24.04.20 & 24.04.20 RESPECTIVELY	

DEPT.
CODE
SCALE
CARD CODE

TITLE 220/33KV SWITCHYARD- EQUIPMENT EARTHING PHILOSOPHY AND DETAILS

DRAWING NO. TB-411-316-016 REV. 02

SHEET No. 01 NEXT SHEET 02

COPY RIGHT AND CONFIDENTIAL
The information on this document is the property of BHARAT HEAVY ELECTRICALS LIMITED
It must not be used directly or indirectly in anyway detrimental to the interest of the company.

BELOW AND ABOVE GROUND EARTHING CONDUCTOR DETAILS :-

ANNEXURE - MATERIALS AND SIZE OF BELOW/ ABOVE GRADE GROUNDING SYSTEM

TABLE 1: BELOW GROUND EARTHING SYSTEM - CONDUCTOR MATERIAL AND SIZE

SL. No.	Description	Material	Size	Remarks
1	Main Grounding Grid Conductor	Mild Steel Rod	40mm Dia	
2	Auxiliary Grounding Mat Conductor	Mild Steel Rod	40mm Dia	
3	Riser (For connection between ground grid & above ground equipment earthing strip)	Mild Steel Rod	40mm Dia	
4	Electrode for Power transformer/ Lighting transformers' neutral, Main earth grid corners, Surge Arrester, Capacitor Voltage Transformer, Potential Transformer, GIS cum Control Room Building, Tariff Metering Room, Lighting cum Lightning Mast (LLM), Lightni	Mild Steel Pipe Electrode	40mm Dia, 3m Long	
5	Power transformer's neutral, Grid periphery (other than grid corner	Mild Steel Rod	40mm Dia, 3m Long	
6	Conductor for Interconnection with other Ground Grid	Mild Steel Rod	40mm Dia	

TABLE 2: ABOVE GROUND EARTHING SYSTEM - CONDUCTOR MATERIAL AND SIZE

SL. No.	Description	Material	Size (mm)	Remarks
1	220kV Outdoor Equipment	GI Mild Steel Flat	75 X 12	
2	220/34.5kV Power Transformer	GI Mild Steel Flat	75 X 12	
3	33kV HV Switchgear (LIB, FCL & Adapter Panel etc.)	GI Mild Steel Flat	75 X 12	
4	Column and Structure	GI Mild Steel Flat	50 X 6	
5	Cable trench, hanger/ rack assembly and cable tressle	GI Mild Steel Flat	50 X 6	
6	LT ACDB, DCDB and other Switchgear including Battery charger panel	GI Mild Steel Flat	50 X 6	
7	Control & Protection Panel, Control desk, LDB, PDB, Lighting Panels, Lighting Poles and lighting transformer	GI Mild Steel Flat	50 X 6	
8	Marshalling Box, Junction Box	GI Mild Steel Flat	50 X 6	
9	HV/LV/ LV Neutral cable box, OLTC Drive mechanism body	GI Mild Steel Flat	50 X 6	
10	Gates and Fence	GI Mild Steel Flat flexible copper braid	50 X 6	
11	Lighting Fixtures and Receptaces	GI Steel Wire	9 SWG	

GENERAL NOTES:

1. EARTH STRIP CLEATED TO LATTICE /PIPE TYPE STRUCTURE AT AN INTERVAL OF 1.0M SUITABLE PROVISION SHALL BE MADE WITH SUPPORT STRUCTURE.
2. ALL EARTH STRIPS SHALL BE TAKEN ALONG EDGE OF STRUCTURE. ALL DRAWING SHOWS TYPICAL ARRANGEMENT ONLY.
3. ALL STRUCTURES/EQUIPMENTS SHALL BE EARTHED AS SHOWN IN THE FOLLOWING SHEETS.
4. BOLT SIZE FOR CONNECTING EARTHING FLAT TO THE EQPT/STRUCTURE SHALL BE TO SUIT RESPECTIVE HOLE SIZE.
5. ALL EARTHING SHALL BE DONE IN ACCORDANCE WITH IS: 3034 UNLESS OTHERWISE STATED IN TECHNICAL SPECIFICATION
6. ONLY ONE EARTHING STRIPS SHALL BE CONNECTED TO ONE RISER.
7. EACH RISER OF A PARTICULAR EQUIPMENT SHALL BE CONNECTED TO A DIFFERENT EARTHROD.
8. FOR WELDING DETAILS REFER RESPECTIVE SHEETS
9. E/WIRE DOWN CONDUCTOR SHALL BE CLEATED AT AN INTERVAL OF 2.0 M ALONG WITH STRUCTURE NO HOLES IN STRUCTURE IS ALLOWED FOR THIS PURPOSE
10. OEM DRAWING FOR WAVE TRAP, GIS AND OTHER PACKAGED ITEM SHALL BE SUBMITTED SEPARATELY.

WO/ LOA No.	LOA NO. RPRC182491/26286965 DTD.24.01.2020
NAME OF CUSTOMER:	INDIAN OIL CORPORATION LIMITED
NAME OF PROJECT:	LSTK JOB FOR ISBL WORK OF 220KV GRID POWER IMPORT AT PANIPAT REFINERY
NAME OF CONSULTANT:	TATA CONSULTING ENGINEERS LIMITED

ADDITIONAL INFORMATION W.O.No.
STATUS OF DRAWING
DISTRIBUTION OF PRINTS

BHARAT HEAVY ELECTRICALS LTD. TRANSMISSION PROJECTS DIVISION

	NAME	SIGN.	DATE
DRAWN	PK	-sd-	15.04.2020
CHECKED	DKS	-sd-	15.04.2020
APPROVED	VK	-sd-	15.04.2020

REV.	DATE	ALTERED / CHECKED / APPROVED	REV.	DATE	ALTERED / CHECKED / APPROVED	REV.	DATE	ALTERED / CHECKED / APPROVED
			02	05.08.20	PK / DKS / VK	01	23.07.20	PK / DKS / VK
ZONE			ZONE	AS PER CONSULTANT/ CUSTOMER COMMENTS DTD. 28.07.20 & 31.07.20 RESPECTIVELY		ZONE	AS PER CONSULTANT/ CUSTOMER COMMENTS DTD. 24.04.20 & 24.04.20 RESPECTIVELY	

DEPT. | CODE | SCALE | CARD CODE

TITLE: 220/33KV SWITCHYARD- EQUIPMENT EARTHING PHILOSOPHY AND DETAILS

DRAWING NO. TB-411-316-016 REV. 02

SHEET No. 02 NEXT SHEET 03

INVENTORY No.	SIGN. & DATE	REF. DRG. No.	COMPUTER DRG. PATH NAME :	COPY RIGHT AND CONFIDENTIAL The information on this document is the property of BHARAT HEAVY ELECTRICALS LIMITED it must not be used directly or indirectly in anyway detrimental to the interest of the company.

DRAWING No. TB-411-316-016

APPENDIX-1: SYSTEM GROUNDING DETAILS

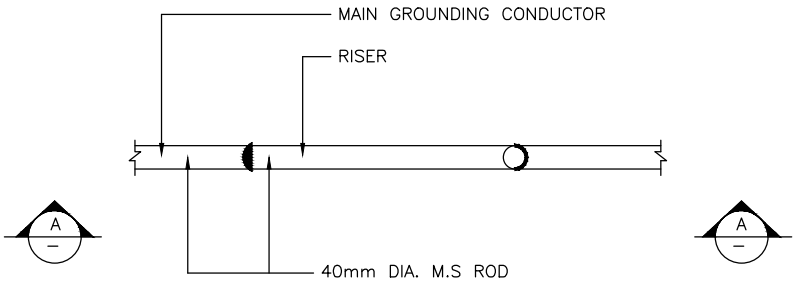

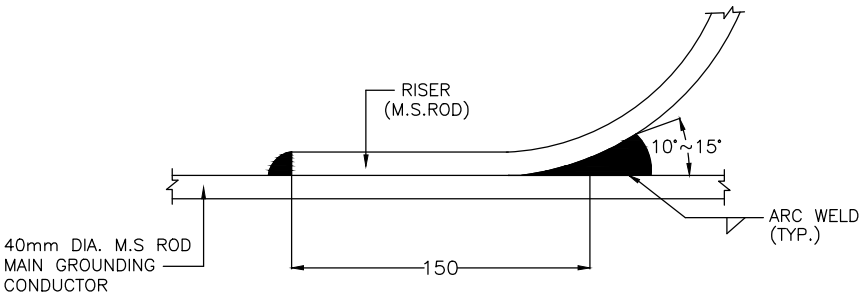

SECTION A

TYPICAL DETAILS OF ANGULAR JOINT BETWEEN M.S RODS

WO/ LOA No.	LOA NO. RPRC182491/26286965 DTD.24.01.2020
ADDITIONAL INFORMATION W.O.No.	NAME OF CUSTOMER: INDIAN OIL CORPORATION LIMITED
STATUS OF DRAWING	NAME OF PROJECT: LSTK JOB FOR ISBL WORK OF 220KV GRID POWER IMPORT AT PANIPAT REFINERY
DISTRIBUTION OF PRINTS	NAME OF CONSULTANT: TATA CONSULTING ENGINEERS LIMITED

BHARAT HEAVY ELECTRICALS LTD.
TRANSMISSION PROJECTS DIVISION

	NAME	SIGN.	DATE
DRAWN	PK	-sd-	15.04.2020
CHECKED	DKS	-sd-	15.04.2020
APPROVED	VK	-sd-	15.04.2020

REV.	DATE	ALTERED / CHECKED / APPROVED	REV.	DATE	ALTERED / CHECKED / APPROVED	REV.	DATE	ALTERED / CHECKED / APPROVED
			02	05.08.20	PK / DKS / VK	01	23.07.20	PK / DKS / VK
ZONE			ZONE	AS PER CONSULTANT/ CUSTOMER COMMENTS DTD. 28.07.20 & 31.07.20 RESPECTIVELY		ZONE	AS PER CONSULTANT/ CUSTOMER COMMENTS DTD. 24.04.20 & 24.04.20 RESPECTIVELY	

DEPT. | CODE | SCALE | CARD CODE

TITLE: 220/33KV SWITCHYARD-EQUIPMENT EARTHING PHILOSOPHY AND DETAILS

DRAWING NO. TB-411-316-016 | REV. 02

SHEET No. 03 | NEXT SHEET 04

INVENTORY No.	SIGN. & DATE	REF. DRG. No.	COMPUTER DRG. PATH NAME :

COPY RIGHT AND CONFIDENTIAL
The information on this document is the property of BHARAT HEAVY ELECTRICALS LIMITED
It must not be used directly or indirectly in anyway detrimental to the interest of the company.

DRAWING No. TB-411-316-016

APPENDIX-1: SYSTEM GROUNDING DETAILS

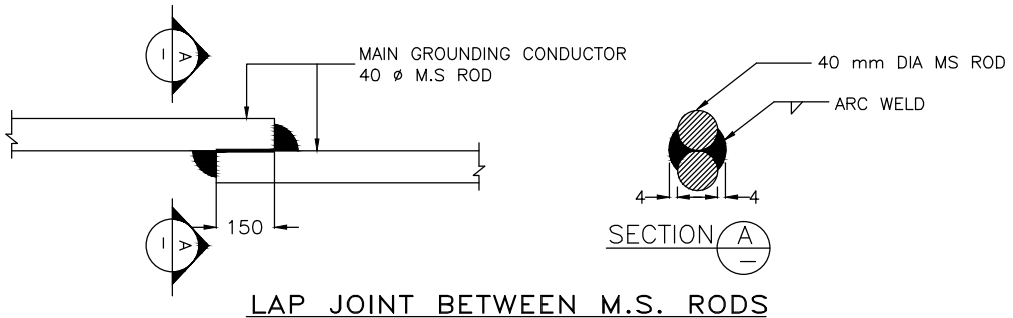

LAP JOINT BETWEEN M.S. RODS

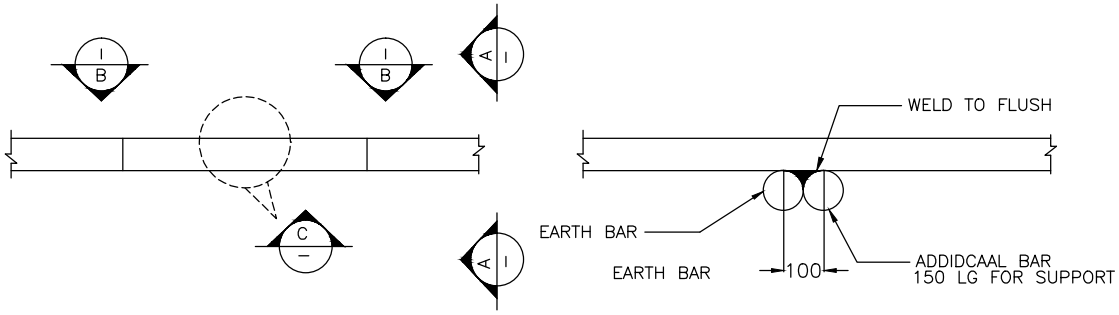

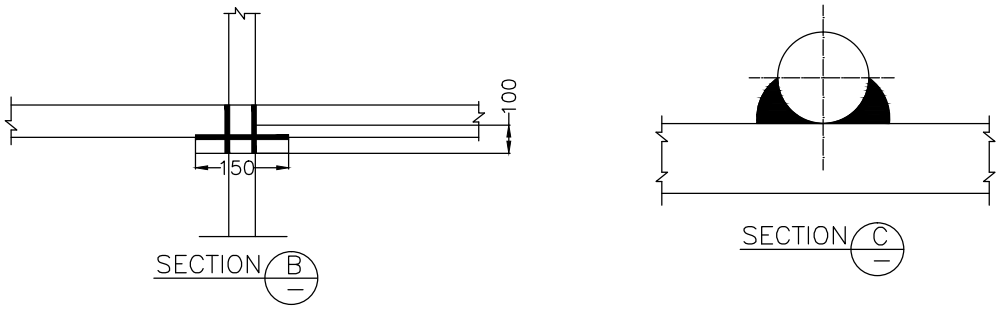

RIGHT ANGLED JOINT

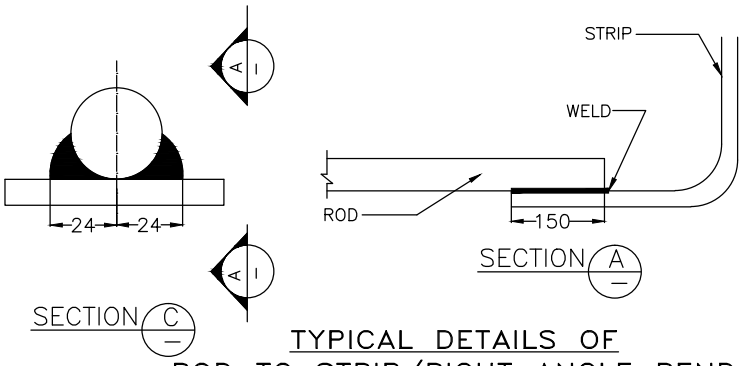

TYPICAL DETAILS OF ROD TO STRIP/RIGHT ANGLE BEND

WO/ LOA No.	LOA NO. RPRC182491/26286965 DTD.24.01.2020
NAME OF CUSTOMER:	INDIAN OIL CORPORATION LIMITED
NAME OF PROJECT:	LSTK JOB FOR ISBL WORK OF 220KV GRID POWER IMPORT AT PANIPAT REFINERY
NAME OF CONSULTANT:	TATA CONSULTING ENGINEERS LIMITED

ADDITIONAL INFORMATION
W.O.No.
STATUS OF DRAWING
DISTRIBUTION OF PRINTS

BHARAT HEAVY ELECTRICALS LTD.
TRANSMISSION PROJECTS DIVISION

	NAME	SIGN.	DATE
DRAWN	PK	-sd-	15.04.2020
CHECKED	DKS	-sd-	15.04.2020
APPROVED	VK	-sd-	15.04.2020

REV.	DATE	ALTERED / CHECKED / APPROVED	REV.	DATE	ALTERED / CHECKED / APPROVED	REV.	DATE	ALTERED / CHECKED / APPROVED
			02	05.08.20	PK / DKS / VK	01	23.07.20	PK / DKS / VK
ZONE			ZONE	AS PER CONSULTANT/ CUSTOMER COMMENTS DTD. 28.07.20 & 31.07.20 RESPECTIVELY		ZONE	AS PER CONSULTANT/ CUSTOMER COMMENTS DTD. 24.04.20 & 24.04.20 RESPECTIVELY	

DEPT. | CODE | SCALE | CARD CODE

TITLE: 220/33KV SWITCHYARD- EQUIPMENT EARTHING PHILOSOPHY AND DETAILS

DRAWING NO. TB-411-316-016 REV. 02

SHEET No. 04 NEXT SHEET 05

INVENTORY No.	SIGN. & DATE	REF. DRG. No.	COMPUTER DRG. PATH NAME :	COPY RIGHT AND CONFIDENTIAL The information on this document is the property of BHARAT HEAVY ELECTRICALS LIMITED it must not be used directly or indirectly in anyway detrimental to the interest of the company.

DRAWING No. TB-411-316-016

APPENDIX-1: SYSTEM GROUNDING DETAILS

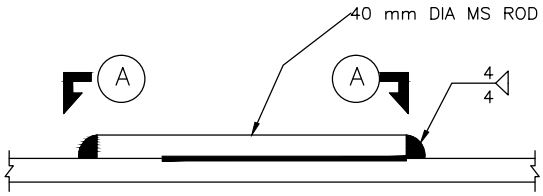

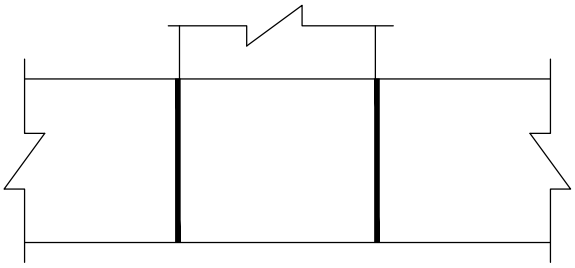

SECTION A-A

CROSS LAP JOINT

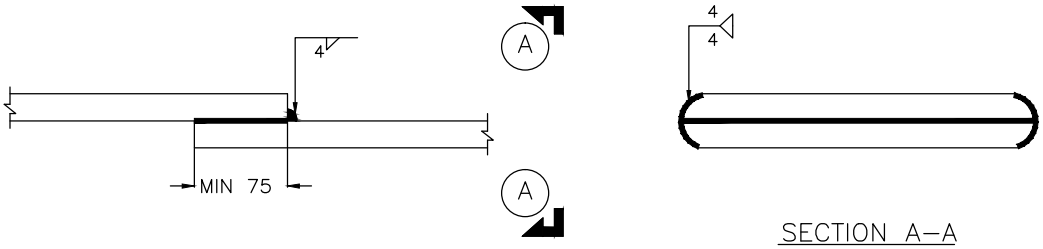

SECTION A-A

TYPICAL DETAILS OF STRAIGHT LAP JOINT/ RISER

WO/ LOA No.	LOA NO. RPRC182491/26286965 DTD.24.01.2020
ADDITIONAL INFORMATION W.O.No.	NAME OF CUSTOMER: INDIAN OIL CORPORATION LIMITED
STATUS OF DRAWING	NAME OF PROJECT: LSTK JOB FOR ISBL WORK OF 220KV GRID POWER IMPORT AT PANIPAT REFINERY
DISTRIBUTION OF PRINTS	NAME OF CONSULTANT: TATA CONSULTING ENGINEERS LIMITED

BHARAT HEAVY ELECTRICALS LTD.
TRANSMISSION PROJECTS DIVISION

	NAME	SIGN.	DATE
DRAWN	PK	-sd-	15.04.2020
CHECKED	DKS	-sd-	15.04.2020
APPROVED	VK	-sd-	15.04.2020

REV.	DATE	ALTERED / CHECKED / APPROVED	REV.	DATE	ALTERED / CHECKED / APPROVED	REV.	DATE	ALTERED / CHECKED / APPROVED
			02	05.08.20	PK / DKS / VK	01	23.07.20	PK / DKS / VK
ZONE			ZONE	AS PER CONSULTANT/ CUSTOMER COMMENTS DTD. 28.07.20 & 31.07.20 RESPECTIVELY		ZONE	AS PER CONSULTANT/ CUSTOMER COMMENTS DTD. 24.04.20 & 24.04.20 RESPECTIVELY	

DEPT. | CODE | SCALE | CARD CODE

TITLE: 220/33KV SWITCHYARD-EQUIPMENT EARTHING PHILOSOPHY AND DETAILS

DRAWING NO. TB-411-316-016 | REV. 02

SHEET No. 05 | NEXT SHEET 06

INVENTORY No.	SIGN. & DATE	REF. DRG. No.	COMPUTER DRG. PATH NAME :

COPY RIGHT AND CONFIDENTIAL
The information on this document is the property of BHARAT HEAVY ELECTRICALS LIMITED
it must not be used directly or indirectly in anyway detrimental to the interest of the company.

DRAWING No. TB-411-316-016

APPENDIX-1: SYSTEM GROUNDING DETAILS

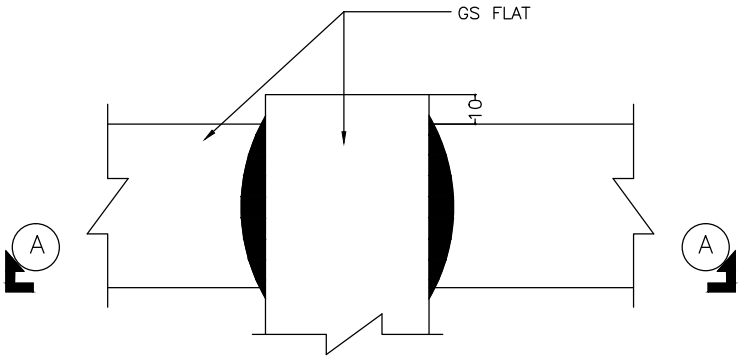

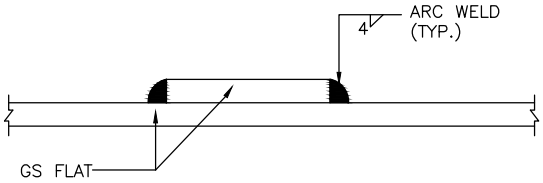

SECTION A-A

TYPICAL DETAILS OF CROSS JOINT BETWEEN GS FLATS

WO/ LOA No.	LOA NO. RPRC182491/26286965 DTD.24.01.2020
NAME OF CUSTOMER:	INDIAN OIL CORPORATION LIMITED
NAME OF PROJECT:	LSTK JOB FOR ISBL WORK OF 220KV GRID POWER IMPORT AT PANIPAT REFINERY
NAME OF CONSULTANT:	TATA CONSULTING ENGINEERS LIMITED

ADDITIONAL INFORMATION
W.O.No.

STATUS OF DRAWING

DISTRIBUTION OF PRINTS

BHARAT HEAVY ELECTRICALS LTD.
TRANSMISSION PROJECTS DIVISION

	NAME	SIGN.	DATE
DRAWN	PK	-sd-	15.04.2020
CHECKED	DKS	-sd-	15.04.2020
APPROVED	VK	-sd-	15.04.2020

REV.	DATE	ALTERED / CHECKED / APPROVED	REV.	DATE	ALTERED / CHECKED / APPROVED	REV.	DATE	ALTERED / CHECKED / APPROVED
			02	05.08.20	PK / DKS / VK	01	23.07.20	PK / DKS / VK
ZONE			ZONE	AS PER CONSULTANT/ CUSTOMER COMMENTS DTD. 28.07.20 & 31.07.20 RESPECTIVELY		ZONE	AS PER CONSULTANT/ CUSTOMER COMMENTS DTD. 24.04.20 & 24.04.20 RESPECTIVELY	

DEPT. | CODE | SCALE | CARD CODE

TITLE: 220/33KV SWITCHYARD- EQUIPMENT EARTHING PHILOSOPHY AND DETAILS

DRAWING NO. TB-411-316-016 REV. 02

SHEET No. 06 NEXT SHEET 07

INVENTORY No.	SIGN. & DATE	REF. DRG. No.	COMPUTER DRG. PATH NAME :

COPY RIGHT AND CONFIDENTIAL
The information on this document is the property of BHARAT HEAVY ELECTRICALS LIMITED
it must not be used directly or indirectly in anyway detrimental to the interest of the company.

DRAWING No. TB-411-316-016

APPENDIX-1: SYSTEM GROUNDING DETAILS

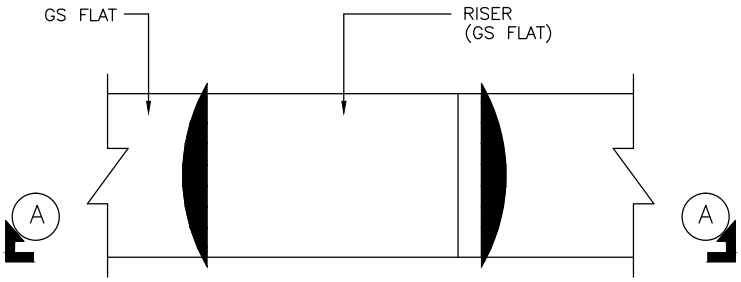

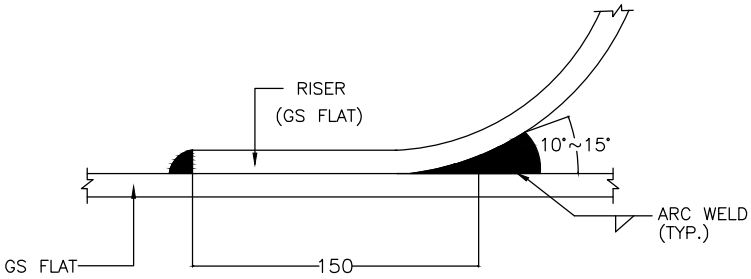

SECTION A-A

TYPICAL DETAILS OF ANGULAR JOINT BETWEEN GS FLATS

WO/ LOA No.	LOA NO. RPRC182491/26286965 DTD.24.01.2020
NAME OF CUSTOMER:	INDIAN OIL CORPORATION LIMITED
NAME OF PROJECT:	LSTK JOB FOR ISBL WORK OF 220KV GRID POWER IMPORT AT PANIPAT REFINERY
NAME OF CONSULTANT:	TATA CONSULTING ENGINEERS LIMITED

ADDITIONAL INFORMATION W.O.No.

STATUS OF DRAWING

DISTRIBUTION OF PRINTS

BHARAT HEAVY ELECTRICALS LTD.
TRANSMISSION PROJECTS DIVISION

	NAME	SIGN.	DATE
DRAWN	PK	-sd-	15.04.2020
CHECKED	DKS	-sd-	15.04.2020
APPROVED	VK	-sd-	15.04.2020

REV.	DATE	ALTERED / CHECKED / APPROVED	REV.	DATE	ALTERED / CHECKED / APPROVED	REV.	DATE	ALTERED / CHECKED / APPROVED
			02	05.08.20	PK / DKS / VK	01	23.07.20	PK / DKS / VK
ZONE			ZONE	AS PER CONSULTANT/ CUSTOMER COMMENTS DTD. 28.07.20 & 31.07.20 RESPECTIVELY		ZONE	AS PER CONSULTANT/ CUSTOMER COMMENTS DTD. 24.04.20 & 24.04.20 RESPECTIVELY	

DEPT. / CODE | SCALE | CARD CODE

TITLE: 220/33KV SWITCHYARD- EQUIPMENT EARTHING PHILOSOPHY AND DETAILS

DRAWING NO. TB-411-316-016 REV. 02

SHEET No. 07 NEXT SHEET 08

INVENTORY No.	SIGN. & DATE	REF. DRG. No.	COMPUTER DRG. PATH NAME :

COPY RIGHT AND CONFIDENTIAL
The information on this document is the property of BHARAT HEAVY ELECTRICALS LIMITED
it must not be used directly or indirectly in anyway detrimental to the interest of the company.

DRAWING No. TB-411-316-016

APPENDIX-1: SYSTEM GROUNDING DETAILS

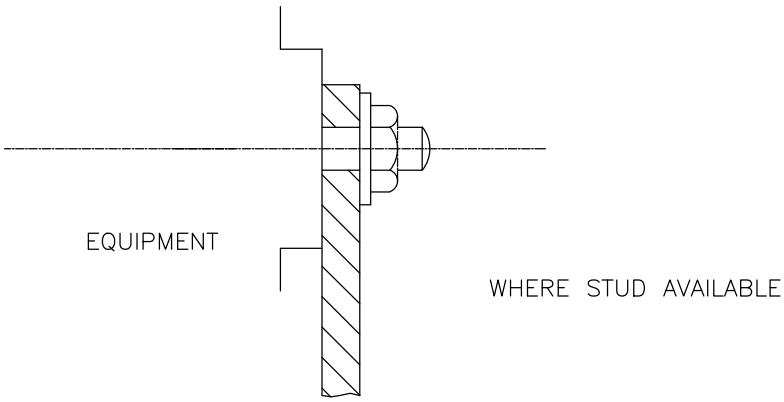

TYPICAL EARTHING TERMINAL JOINT

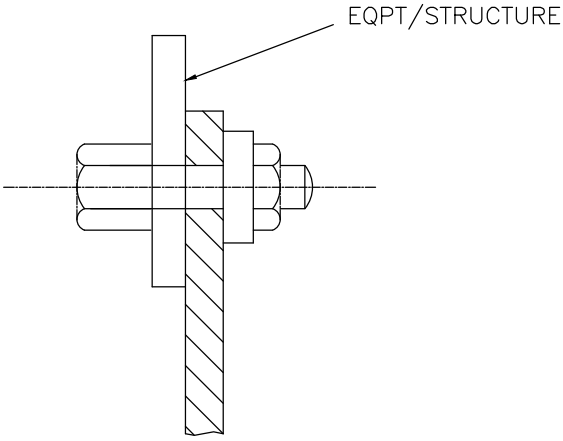

NOTES:

1. THIS IS GENERAL TYPICAL BOLTING ARRANGEMENT APPLICABLE TO ALL PANELS, EQUIPMENT,ETC,WHERE BOLTING ARRANGEMENT IS PROVIDED.
2. IN CASE EARTHING TERMINAL COMPRISES ONLY A TAPPED HOLE SUITABLE BOLT/ SCREW WITH WASHER MAY BE USED FOR EARTHING CONDUCTOR TERMINATION

TYPICAL GROUNDING TERMINAL JOINT WHERE ONLY THROUGH HOLE IS AVAILABLE

WO/ LOA No.	LOA NO. RPRC182491/26286965 DTD.24.01.2020
NAME OF CUSTOMER:	INDIAN OIL CORPORATION LIMITED
NAME OF PROJECT:	LSTK JOB FOR ISBL WORK OF 220KV GRID POWER IMPORT AT PANIPAT REFINERY
NAME OF CONSULTANT:	TATA CONSULTING ENGINEERS LIMITED

ADDITIONAL INFORMATION W.O.No.

STATUS OF DRAWING

DISTRIBUTION OF PRINTS

BHARAT HEAVY ELECTRICALS LTD. TRANSMISSION PROJECTS DIVISION

	NAME	SIGN.	DATE
DRAWN	PK	-sd-	15.04.2020
CHECKED	DKS	-sd-	15.04.2020
APPROVED	VK	-sd-	15.04.2020

REV.	DATE	ALTERED / CHECKED / APPROVED	REV.	DATE	ALTERED / CHECKED / APPROVED	REV.	DATE	ALTERED / CHECKED / APPROVED
			02	05.08.20	PK / DKS / VK	01	23.07.20	PK / DKS / VK
ZONE			ZONE	AS PER CONSULTANT/ CUSTOMER COMMENTS DTD. 28.07.20 & 31.07.20 RESPECTIVELY		ZONE	AS PER CONSULTANT/ CUSTOMER COMMENTS DTD. 24.04.20 & 24.04.20 RESPECTIVELY	

DEPT. / CODE — SCALE — CARD CODE

TITLE: 220/33KV SWITCHYARD- EQUIPMENT EARTHING PHILOSOPHY AND DETAILS

DRAWING NO. TB-411-316-016 REV. 02

SHEET No. 08 NEXT SHEET 09

INVENTORY No.	SIGN. & DATE	REF. DRG. No.	COMPUTER DRG. PATH NAME :

COPY RIGHT AND CONFIDENTIAL
The information on this document is the property of BHARAT HEAVY ELECTRICALS LIMITED
it must not be used directly or indirectly in anyway detrimental to the interest of the company.

DRAWING No. TB-411-316-016

APPENDIX-1: SYSTEM GROUNDING DETAILS

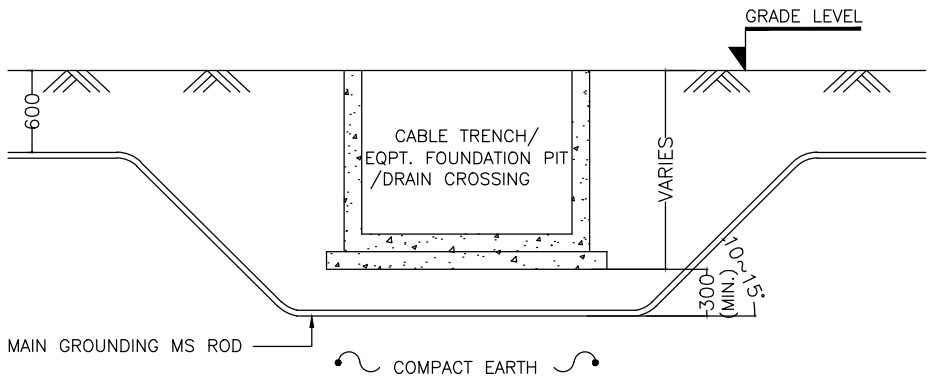

TYPICAL DETAILS OF CROSSING OF GROUNDING FROM CABLE TRENCH/ EQUIPMENT FOUNDATION PIT/ DRAIN

WO/ LOA No.	LOA NO. RPRC182491/26286965 DTD.24.01.2020
NAME OF CUSTOMER:	INDIAN OIL CORPORATION LIMITED
NAME OF PROJECT:	LSTK JOB FOR ISBL WORK OF 220KV GRID POWER IMPORT AT PANIPAT REFINERY
NAME OF CONSULTANT:	TATA CONSULTING ENGINEERS LIMITED

ADDITIONAL INFORMATION
W.O.No.

STATUS OF DRAWING

DISTRIBUTION OF PRINTS

BHARAT HEAVY ELECTRICALS LTD.
TRANSMISSION PROJECTS DIVISION

	NAME	SIGN.	DATE
DRAWN	PK	-sd-	15.04.2020
CHECKED	DKS	-sd-	15.04.2020
APPROVED	VK	-sd-	15.04.2020

REV.	DATE	ALTERED / CHECKED / APPROVED	REV.	DATE	ALTERED / CHECKED / APPROVED	REV.	DATE	ALTERED / CHECKED / APPROVED
			02	05.08.20	PK / DKS / VK	01	23.07.20	PK / DKS / VK
ZONE			ZONE	AS PER CONSULTANT/ CUSTOMER COMMENTS DTD. 28.07.20 & 31.07.20 RESPECTIVELY		ZONE	AS PER CONSULTANT/ CUSTOMER COMMENTS DTD. 24.04.20 & 24.04.20 RESPECTIVELY	

DEPT. | CODE | SCALE | CARD CODE

TITLE: 220/33KV SWITCHYARD- EQUIPMENT EARTHING PHILOSOPHY AND DETAILS

DRAWING NO. TB-411-316-016 REV. 02

SHEET No. 09 NEXT SHEET 10

INVENTORY No.	SIGN. & DATE	REF. DRG. No.	COMPUTER DRG. PATH NAME :

COPY RIGHT AND CONFIDENTIAL
The information on this document is the property of BHARAT HEAVY ELECTRICALS LIMITED
It must not be used directly or indirectly in anyway detrimental to the interest of the company.

DRAWING No. TB-411-316-016

APPENDIX-1: SYSTEM GROUNDING DETAILS

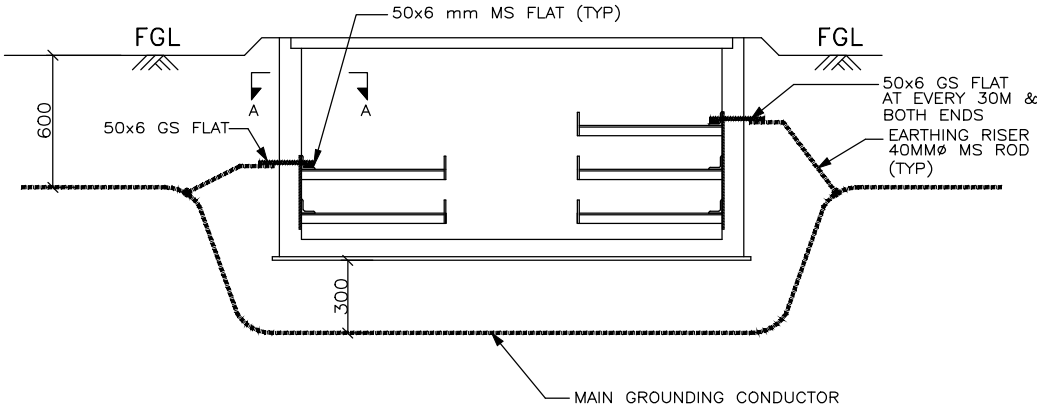

TYPICAL CROSS SECTION OF CABLE TRENCH

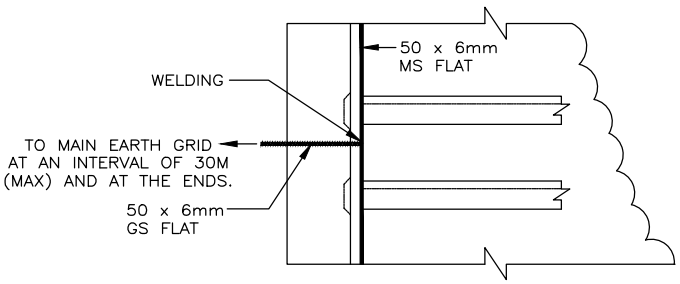

SECTION A-A

NOTES:

1. GI FLAT SHALL RUN ON TOP TIER ALL ALONG THE CABLE TRENCHES & WELDED TO EACH OF THE RACKS.
2. GI FLAT SHALL BE EARTHED AT 30M INTERVAL AND ALSO AT BOTH ENDS.

TYPICAL DETAILS OF GROUNDING OF CABLE TRENCH

REV.	DATE	ALTERED	REV.	DATE	ALTERED	PK	REV.	DATE	ALTERED	PK
		CHECKED	02	05.08.20	CHECKED	DKS	01	23.07.20	CHECKED	DKS
		APPROVED			APPROVED	VK			APPROVED	VK
ZONE			ZONE	AS PER CONSULTANT/ CUSTOMER COMMENTS DTD. 28.07.20 & 31.07.20 RESPECTIVELY			ZONE	AS PER CONSULTANT/ CUSTOMER COMMENTS DTD. 24.04.20 & 24.04.20 RESPECTIVELY		

ADDITIONAL INFORMATION W.O.No.

STATUS OF DRAWING

DISTRIBUTION OF PRINTS

WO/ LOA No. LOA NO. RPRC182491/26286965 DTD.24.01.2020

NAME OF CUSTOMER: INDIAN OIL CORPORATION LIMITED

NAME OF PROJECT: LSTK JOB FOR ISBL WORK OF 220KV GRID POWER IMPORT AT PANIPAT REFINERY

NAME OF CONSULTANT: TATA CONSULTING ENGINEERS LIMITED

BHARAT HEAVY ELECTRICALS LTD. TRANSMISSION PROJECTS DIVISION

	NAME	SIGN.	DATE
DRAWN	PK	-sd-	15.04.2020
CHECKED	DKS	-sd-	15.04.2020
APPROVED	VK	-sd-	15.04.2020

DEPT. | CODE | SCALE | CARD CODE

TITLE: 220/33KV SWITCHYARD- EQUIPMENT EARTHING PHILOSOPHY AND DETAILS

DRAWING NO. TB-411-316-016 REV. 02

SHEET No. 10 NEXT SHEET 11

INVENTORY No.	SIGN. & DATE	REF. DRG. No.	COMPUTER DRG. PATH NAME :

COPY RIGHT AND CONFIDENTIAL
The information on this document is the property of BHARAT HEAVY ELECTRICALS LIMITED
It must not be used directly or indirectly in anyway detrimental to the interest of the company.

DRAWING No. TB-411-316-016

APPENDIX-1: SYSTEM GROUNDING DETAILS

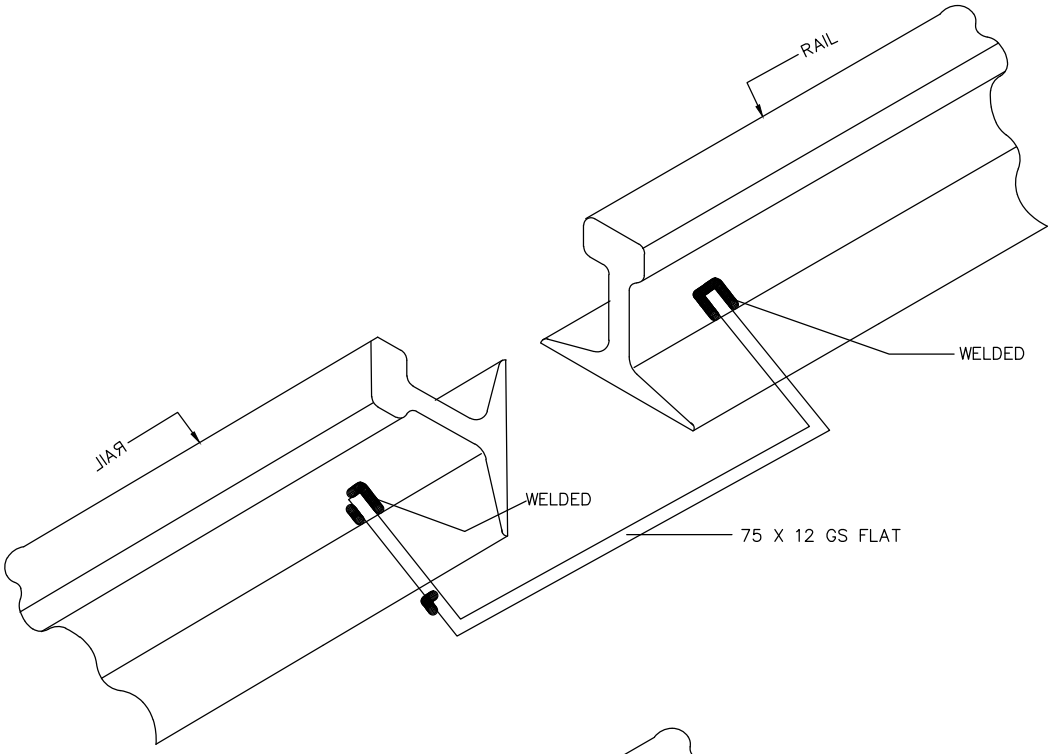

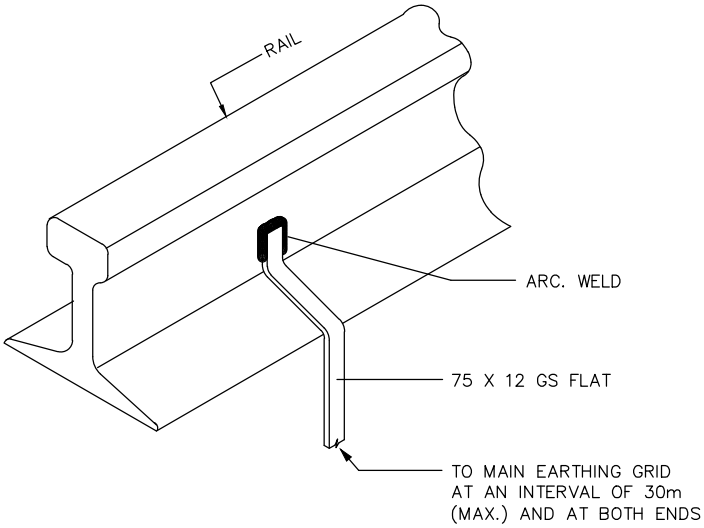

TYOCAL DETAILS OF GROUNDING OF RAILS

WO/ LOA No.	LOA NO. RPRC182491/26286965 DTD.24.01.2020
NAME OF CUSTOMER:	INDIAN OIL CORPORATION LIMITED
NAME OF PROJECT:	LSTK JOB FOR ISBL WORK OF 220KV GRID POWER IMPORT AT PANIPAT REFINERY
NAME OF CONSULTANT:	TATA CONSULTING ENGINEERS LIMITED

ADDITIONAL INFORMATION W.O.No.

STATUS OF DRAWING

DISTRIBUTION OF PRINTS

BHARAT HEAVY ELECTRICALS LTD. TRANSMISSION PROJECTS DIVISION

	NAME	SIGN.	DATE
DRAWN	PK	-sd-	15.04.2020
CHECKED	DKS	-sd-	15.04.2020
APPROVED	VK	-sd-	15.04.2020

REV.	DATE	ALTERED / CHECKED / APPROVED	REV.	DATE	ALTERED / CHECKED / APPROVED	REV.	DATE	ALTERED / CHECKED / APPROVED
			02	05.08.20	PK / DKS / VK	01	23.07.20	PK / DKS / VK
ZONE			ZONE	AS PER CONSULTANT/ CUSTOMER COMMENTS DTD. 28.07.20 & 31.07.20 RESPECTIVELY		ZONE	AS PER CONSULTANT/ CUSTOMER COMMENTS DTD. 24.04.20 & 24.04.20 RESPECTIVELY	

DEPT. / CODE | SCALE | CARD CODE

TITLE: 220/33KV SWITCHYARD- EQUIPMENT EARTHING PHILOSOPHY AND DETAILS

DRAWING NO. TB-411-316-016 REV. 02

SHEET No. 11 NEXT SHEET 12

INVENTORY No.	SIGN. & DATE	REF. DRG. No.	COMPUTER DRG. PATH NAME :

COPY RIGHT AND CONFIDENTIAL
The information on this document is the property of BHARAT HEAVY ELECTRICALS LIMITED
It must not be used directly or indirectly in anyway detrimental to the interest of the company.

DRAWING No. TB-411-316-016

APPENDIX-1: SYSTEM GROUNDING DETAILS

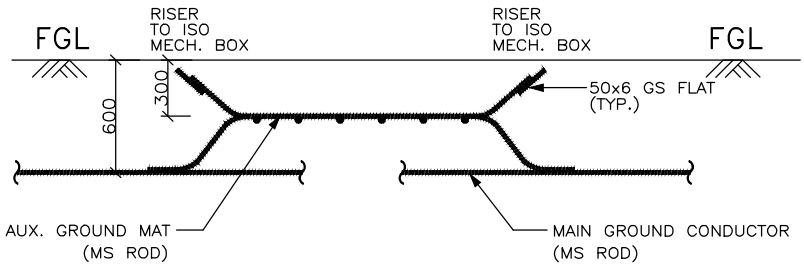

ELEVATION

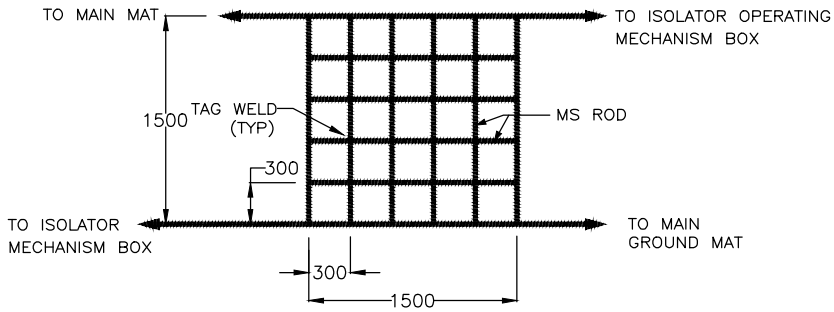

PLAN

TYPICAL DETAILS OF SUB/ AUXILIARY GROUND MAT FOR ISOLATOR

WO/ LOA No.	LOA NO. RPRC182491/26286965 DTD.24.01.2020
NAME OF CUSTOMER:	INDIAN OIL CORPORATION LIMITED
NAME OF PROJECT:	LSTK JOB FOR ISBL WORK OF 220KV GRID POWER IMPORT AT PANIPAT REFINERY
NAME OF CONSULTANT:	TATA CONSULTING ENGINEERS LIMITED

ADDITIONAL INFORMATION W.O.No.

STATUS OF DRAWING

DISTRIBUTION OF PRINTS

BHARAT HEAVY ELECTRICALS LTD. TRANSMISSION PROJECTS DIVISION

	NAME	SIGN.	DATE
DRAWN	PK	-sd-	15.04.2020
CHECKED	DKS	-sd-	15.04.2020
APPROVED	VK	-sd-	15.04.2020

REV.	DATE	ALTERED / CHECKED / APPROVED	REV.	DATE	ALTERED / CHECKED / APPROVED	REV.	DATE	ALTERED / CHECKED / APPROVED
			02	05.08.20	PK / DKS / VK	01	23.07.20	PK / DKS / VK
ZONE			ZONE	AS PER CONSULTANT/ CUSTOMER COMMENTS DTD. 28.07.20 & 31.07.20 RESPECTIVELY		ZONE	AS PER CONSULTANT/ CUSTOMER COMMENTS DTD. 24.04.20 & 24.04.20 RESPECTIVELY	

DEPT. / CODE / SCALE / CARD CODE

TITLE: 220/33KV SWITCHYARD- EQUIPMENT EARTHING PHILOSOPHY AND DETAILS

DRAWING NO. TB-411-316-016 REV. 02

SHEET No. 12 NEXT SHEET 13

INVENTORY No.	SIGN. & DATE	REF. DRG. No.	COMPUTER DRG. PATH NAME :

COPY RIGHT AND CONFIDENTIAL
The information on this document is the property of BHARAT HEAVY ELECTRICALS LIMITED
It must not be used directly or indirectly in anyway detrimental to the interest of the company.

DRAWING No. TB-411-316-016

APPENDIX-1: SYSTEM GROUNDING DETAILS

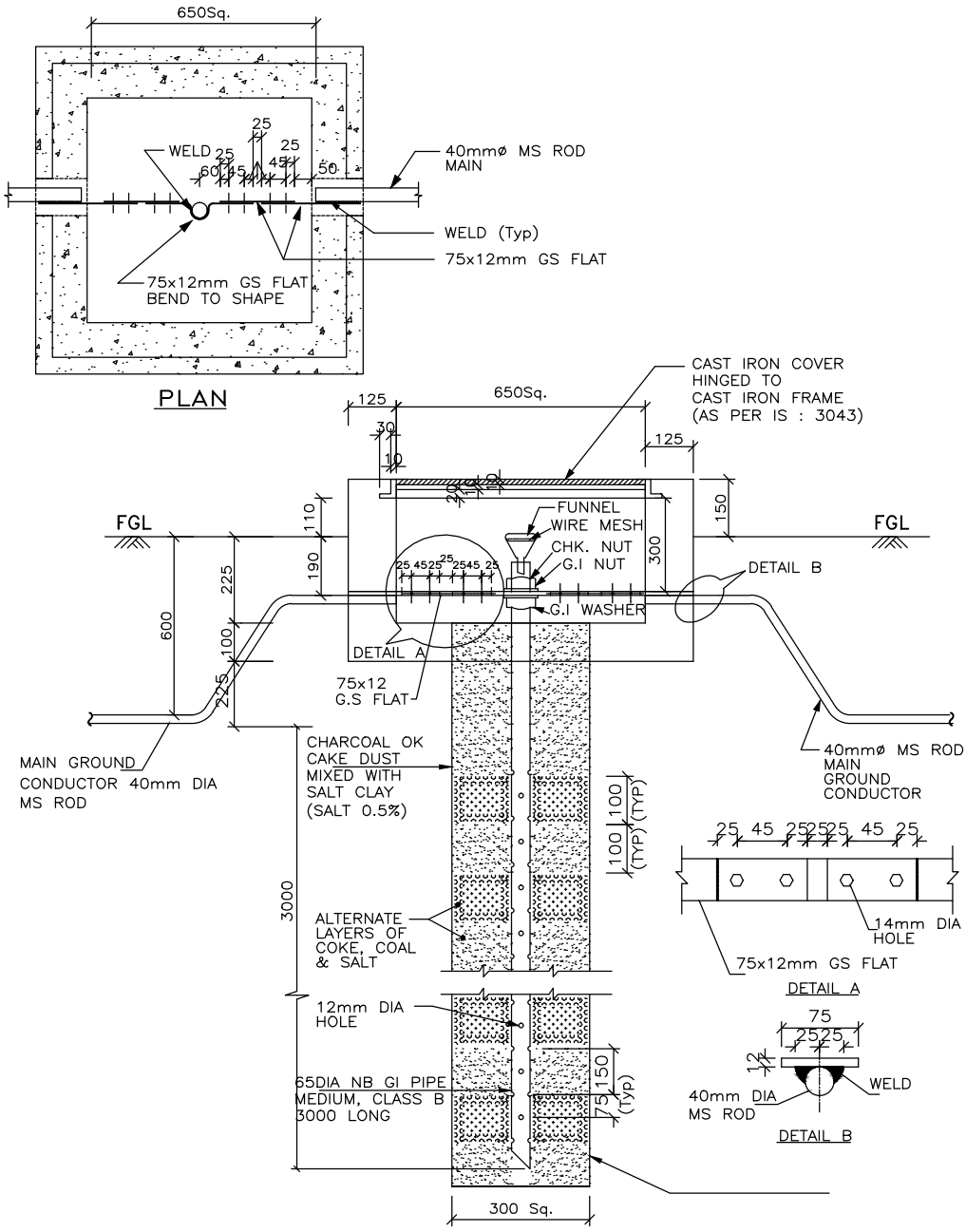

TYPICAL DETAILS OF PIPE GROUND ELECTRODE

WO/ LOA No.	LOA NO. RPRC182491/26286965 DTD.24.01.2020
NAME OF CUSTOMER:	INDIAN OIL CORPORATION LIMITED
NAME OF PROJECT:	LSTK JOB FOR ISBL WORK OF 220KV GRID POWER IMPORT AT PANIPAT REFINERY
NAME OF CONSULTANT:	TATA CONSULTING ENGINEERS LIMITED
ADDITIONAL INFORMATION W.O.No.	
STATUS OF DRAWING	
DISTRIBUTION OF PRINTS	

BHARAT HEAVY ELECTRICALS LTD. TRANSMISSION PROJECTS DIVISION

	NAME	SIGN.	DATE
DRAWN	PK	-sd-	15.04.2020
CHECKED	DKS	-sd-	15.04.2020
APPROVED	VK	-sd-	15.04.2020

REV.	DATE	ALTERED / CHECKED / APPROVED	REV.	DATE	ALTERED / CHECKED / APPROVED	REV.	DATE	ALTERED / CHECKED / APPROVED
			02	05.08.20	PK / DKS / VK	01	23.07.20	PK / DKS / VK
ZONE			ZONE	AS PER CONSULTANT/ CUSTOMER COMMENTS DTD. 28.07.20 & 31.07.20 RESPECTIVELY		ZONE	AS PER CONSULTANT/ CUSTOMER COMMENTS DTD. 24.04.20 & 24.04.20 RESPECTIVELY	

DEPT. | CODE | SCALE | CARD CODE

TITLE: 220/33KV SWITCHYARD- EQUIPMENT EARTHING PHILOSOPHY AND DETAILS

DRAWING NO. TB-411-316-016 REV. 02

SHEET No. 13 NEXT SHEET 14

INVENTORY No.	SIGN. & DATE	REF. DRG. No.	COMPUTER DRG. PATH NAME :

COPY RIGHT AND CONFIDENTIAL
The information on this document is the property of BHARAT HEAVY ELECTRICALS LIMITED
It must not be used directly or indirectly in anyway detrimental to the interest of the company.

DRAWING No. TB-411-316-016

APPENDIX-1: SYSTEM GROUNDING DETAILS

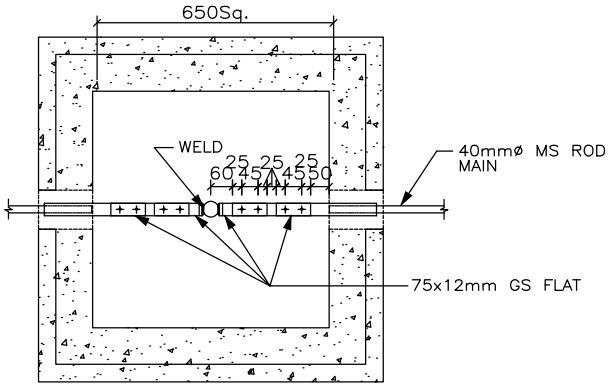

PLAN

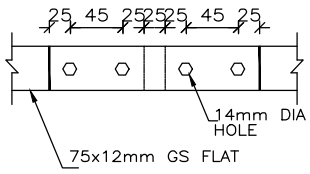

DETAIL A

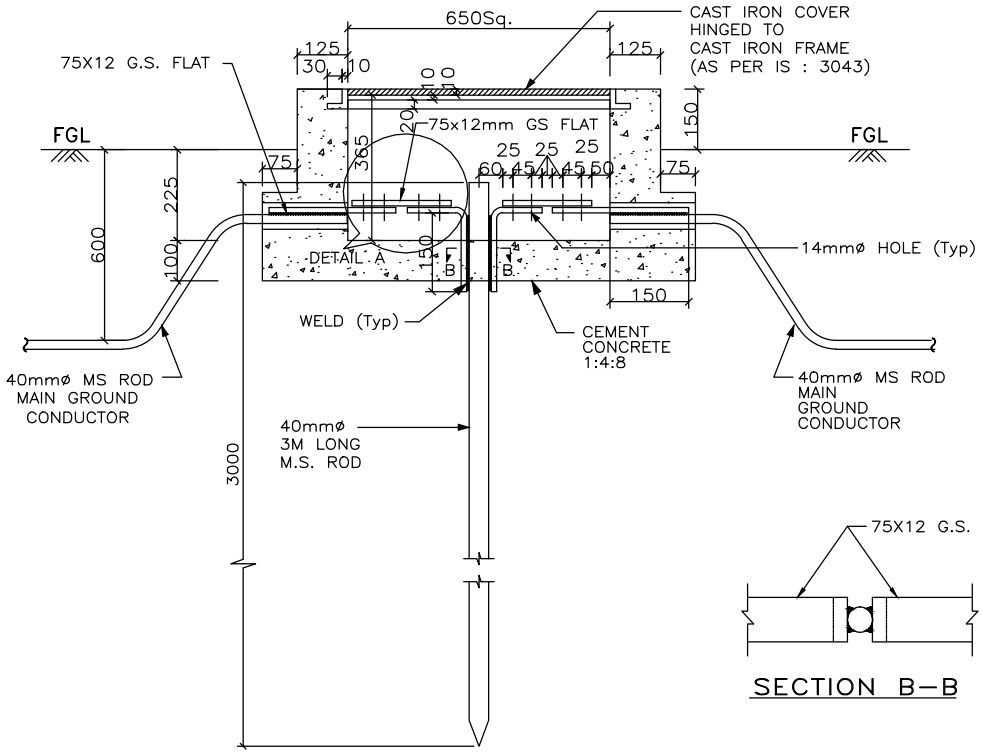

ELEVATION

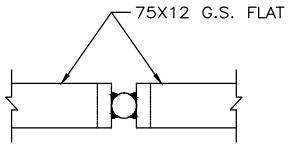

SECTION B-B

TYPICAL DETAILS OF ROD ELECTRODE IN TREATED PIT WITH TEST LINK FOR TRANSFORMER NEUTRAL

WO/ LOA No.	LOA NO. RPRC182491/26286965 DTD.24.01.2020
NAME OF CUSTOMER:	INDIAN OIL CORPORATION LIMITED
NAME OF PROJECT:	LSTK JOB FOR ISBL WORK OF 220KV GRID POWER IMPORT AT PANIPAT REFINERY
NAME OF CONSULTANT:	TATA CONSULTING ENGINEERS LIMITED

ADDITIONAL INFORMATION
W.O.No.
STATUS OF DRAWING
DISTRIBUTION OF PRINTS

BHARAT HEAVY ELECTRICALS LTD.
TRANSMISSION PROJECTS DIVISION

	NAME	SIGN.	DATE
DRAWN	PK	-sd-	15.04.2020
CHECKED	DKS	-sd-	15.04.2020
APPROVED	VK	-sd-	15.04.2020

REV.	DATE	ALTERED / CHECKED / APPROVED	REV.	DATE	ALTERED / CHECKED / APPROVED	REV.	DATE	ALTERED / CHECKED / APPROVED
			02	05.08.20	PK / DKS / VK	01	23.07.20	PK / DKS / VK
ZONE			ZONE	AS PER CONSULTANT/ CUSTOMER COMMENTS DTD. 28.07.20 & 31.07.20 RESPECTIVELY		ZONE	AS PER CONSULTANT/ CUSTOMER COMMENTS DTD. 24.04.20 & 24.04.20 RESPECTIVELY	

DEPT. | CODE | SCALE | CARD CODE

TITLE: 220/33KV SWITCHYARD- EQUIPMENT EARTHING PHILOSOPHY AND DETAILS

DRAWING NO. TB-411-316-016 REV. 02

SHEET No. 14 NEXT SHEET 15

INVENTORY No.	SIGN. & DATE	REF. DRG. No.	COMPUTER DRG. PATH NAME :

COPY RIGHT AND CONFIDENTIAL
The information on this document is the property of BHARAT HEAVY ELECTRICALS LIMITED
It must not be used directly or indirectly in anyway detrimental to the interest of the company.

DRAWING No. TB-411-316-016

APPENDIX-2: EQUIPMENT GROUNDING DETAILS

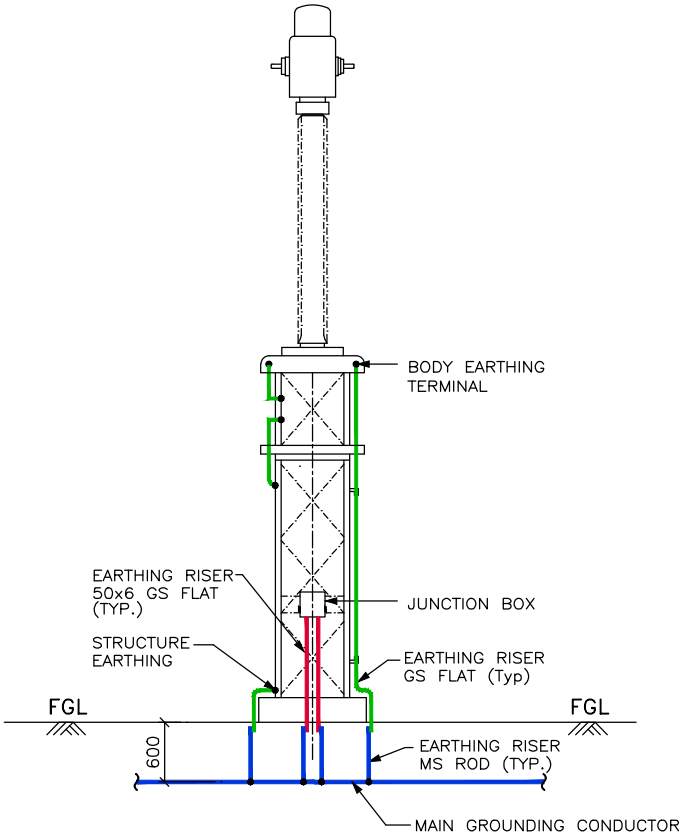

ELEVATION

LEGEND:

- 40mmø MS ROD
- 75 x 12 mm GS FLAT
- 50 x 6 mm GS FLAT

NOTES:

1. NO. OF RISERS FOR EQUIPMENT= 2NOS./ PHASE
2. NO. OF RISERS FOR EQUIPMENT JUNCTION BOX= 2NOS.
3. CLEAT CLAMP SHALL BE PROVIDED AT 1000MM INTERVAL.

TYPICAL GROUNDING DETAILS OF 220KV CURRENT TRANSFORMER

WO/ LOA No.	LOA NO. RPRC182491/26286965 DTD.24.01.2020		
ADDITIONAL INFORMATION W.O.No.	NAME OF CUSTOMER:	INDIAN OIL CORPORATION LIMITED	
	NAME OF PROJECT:	LSTK JOB FOR ISBL WORK OF 220KV GRID POWER IMPORT AT PANIPAT REFINERY	
STATUS OF DRAWING	NAME OF CONSULTANT:	TATA CONSULTING ENGINEERS LIMITED	
DISTRIBUTION OF PRINTS	BHARAT HEAVY ELECTRICALS LTD. TRANSMISSION PROJECTS DIVISION		

	NAME	SIGN.	DATE
DRAWN	PK	-sd-	15.04.2020
CHECKED	DKS	-sd-	15.04.2020
APPROVED	VK	-sd-	15.04.2020

REV.	DATE	ALTERED / CHECKED / APPROVED	REV.	DATE	ALTERED / CHECKED / APPROVED	REV.	DATE	ALTERED / CHECKED / APPROVED
			02	05.08.20	PK / DKS / VK	01	23.07.20	PK / DKS / VK
ZONE			ZONE	AS PER CONSULTANT/ CUSTOMER COMMENTS DTD. 28.07.20 & 31.07.20 RESPECTIVELY		ZONE	AS PER CONSULTANT/ CUSTOMER COMMENTS DTD. 24.04.20 & 24.04.20 RESPECTIVELY	

DEPT. | CODE | SCALE | CARD CODE

TITLE: 220/33KV SWITCHYARD- EQUIPMENT EARTHING PHILOSOPHY AND DETAILS

DRAWING NO. TB-411-316-016 REV. 02

SHEET No. 15 NEXT SHEET 16

INVENTORY No.	SIGN. & DATE	REF. DRG. No.	COMPUTER DRG. PATH NAME :

COPY RIGHT AND CONFIDENTIAL
The information on this document is the property of BHARAT HEAVY ELECTRICALS LIMITED
It must not be used directly or indirectly in anyway detrimental to the interest of the company.

DRAWING No. TB-411-316-016

APPENDIX-2: EQUIPMENT GROUNDING DETAILS

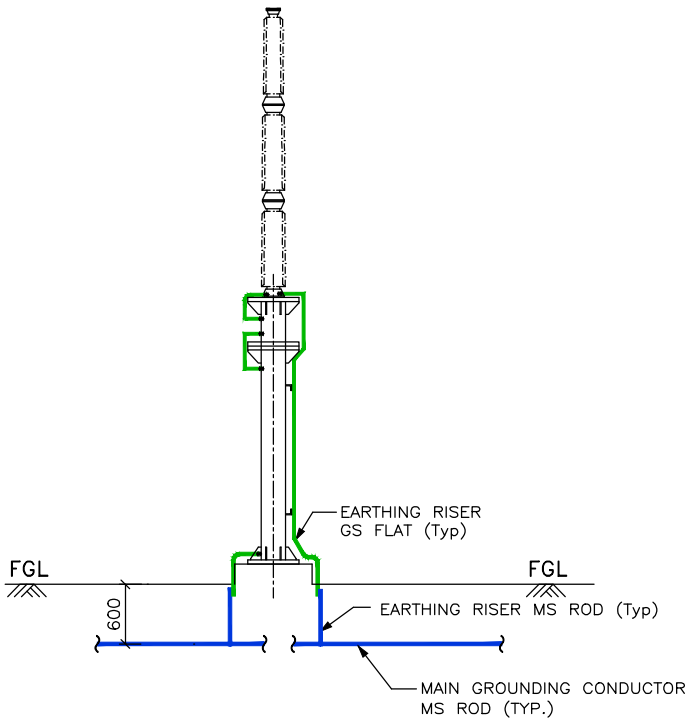

ELEVATION

LEGEND:

- 40mmø MS ROD
- 75 x 12 mm GS FLAT
- 50 x 6 mm GS FLAT

NOTES:

1. NO. OF RISERS FOR EQUIPMENT= 2NOS./ PHASE
2. CLEAT CLAMP SHALL BE PROVIDED AT 1000MM INTERVAL.

TYPICAL GROUNDING DETAIL OF 220KV POST INSULATOR

WO/ LOA No.	LOA NO. RPRC182491/26286965 DTD.24.01.2020
NAME OF CUSTOMER:	INDIAN OIL CORPORATION LIMITED
NAME OF PROJECT:	LSTK JOB FOR ISBL WORK OF 220KV GRID POWER IMPORT AT PANIPAT REFINERY
NAME OF CONSULTANT:	TATA CONSULTING ENGINEERS LIMITED

ADDITIONAL INFORMATION W.O.No.

STATUS OF DRAWING

DISTRIBUTION OF PRINTS

BHARAT HEAVY ELECTRICALS LTD. TRANSMISSION PROJECTS DIVISION

	NAME	SIGN.	DATE
DRAWN	PK	-sd-	15.04.2020
CHECKED	DKS	-sd-	15.04.2020
APPROVED	VK	-sd-	15.04.2020

REV.	DATE	ALTERED	REV.	DATE	ALTERED PK	REV.	DATE	ALTERED PK
		CHECKED	02	05.08.20	CHECKED DKS	01	23.07.20	CHECKED DKS
		APPROVED			APPROVED VK			APPROVED VK
ZONE			ZONE	AS PER CONSULTANT/ CUSTOMER COMMENTS DTD. 28.07.20 & 31.07.20 RESPECTIVELY		ZONE	AS PER CONSULTANT/ CUSTOMER COMMENTS DTD. 24.04.20 & 24.04.20 RESPECTIVELY	

DEPT. | CODE | SCALE | CARD CODE

TITLE: 220/33KV SWITCHYARD- EQUIPMENT EARTHING PHILOSOPHY AND DETAILS

DRAWING NO. TB-411-316-016 REV. 02

SHEET No. 16 NEXT SHEET 17

INVENTORY No.	SIGN. & DATE	REF. DRG. No.	COMPUTER DRG. PATH NAME :

COPY RIGHT AND CONFIDENTIAL
The information on this document is the property of BHARAT HEAVY ELECTRICALS LIMITED
It must not be used directly or indirectly in anyway detrimental to the interest of the company.

DRAWING No. TB-411-316-016

APPENDIX-2: EQUIPMENT GROUNDING DETAILS

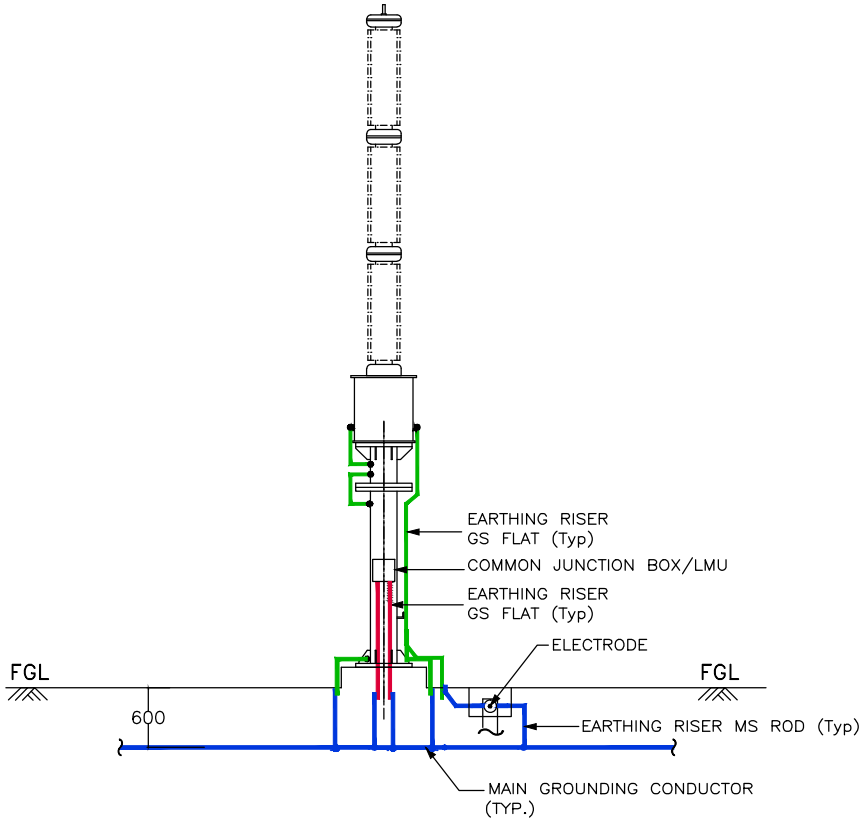

ELEVATION

LEGEND:

- 40mmø MS ROD
- 75 x 12 mm GS FLAT
- 50 x 6 mm GS FLAT

NOTES:

1. NO. OF RISERS FOR EQUIPMENT= 2NOS./ PHASE
2. NO. OF RISERS FOR EQUIPMENT JUNCTION BOX= 2NOS.
3. NO. OF PIPE ELECTRODE IN TREATED PIT WITH TEST LINK= 1NOS.
4. CLEAT CLAMP SHALL BE PROVIDED AT 1000MM INTERVAL.

TYPICAL GROUNDING DETAILS OF 220KV CAPACITIVE VOLTAGE/ POTENTIAL TRANSFORMER

WO/ LOA No.	LOA NO. RPRC182491/26286965 DTD.24.01.2020
NAME OF CUSTOMER:	INDIAN OIL CORPORATION LIMITED
NAME OF PROJECT:	LSTK JOB FOR ISBL WORK OF 220KV GRID POWER IMPORT AT PANIPAT REFINERY
NAME OF CONSULTANT:	TATA CONSULTING ENGINEERS LIMITED
ADDITIONAL INFORMATION W.O.No.	
STATUS OF DRAWING	
DISTRIBUTION OF PRINTS	

BHARAT HEAVY ELECTRICALS LTD.
TRANSMISSION PROJECTS DIVISION

	NAME	SIGN.	DATE
DRAWN	PK	-sd-	15.04.2020
CHECKED	DKS	-sd-	15.04.2020
APPROVED	VK	-sd-	15.04.2020

REV.	DATE	ALTERED	REV.	DATE	ALTERED	REV.	DATE	ALTERED
		CHECKED	02	05.08.20	PK	01	23.07.20	PK
		APPROVED			CHECKED DKS			CHECKED DKS
					APPROVED VK			APPROVED VK
ZONE			ZONE	AS PER CONSULTANT/ CUSTOMER COMMENTS DTD. 28.07.20 & 31.07.20 RESPECTIVELY		ZONE	AS PER CONSULTANT/ CUSTOMER COMMENTS DTD. 24.04.20 & 24.04.20 RESPECTIVELY	

DEPT. | CODE | SCALE | CARD CODE

TITLE: 220/33KV SWITCHYARD- EQUIPMENT EARTHING PHILOSOPHY AND DETAILS

DRAWING NO. TB-411-316-016 REV. 02

SHEET No. 17 NEXT SHEET 18

INVENTORY No.	SIGN. & DATE	REF. DRG. No.	COMPUTER DRG. PATH NAME :

COPY RIGHT AND CONFIDENTIAL
The information on this document is the property of BHARAT HEAVY ELECTRICALS LIMITED
It must not be used directly or indirectly in anyway detrimental to the interest of the company.

DRAWING No. TB-411-316-016

APPENDIX-2: EQUIPMENT GROUNDING DETAILS

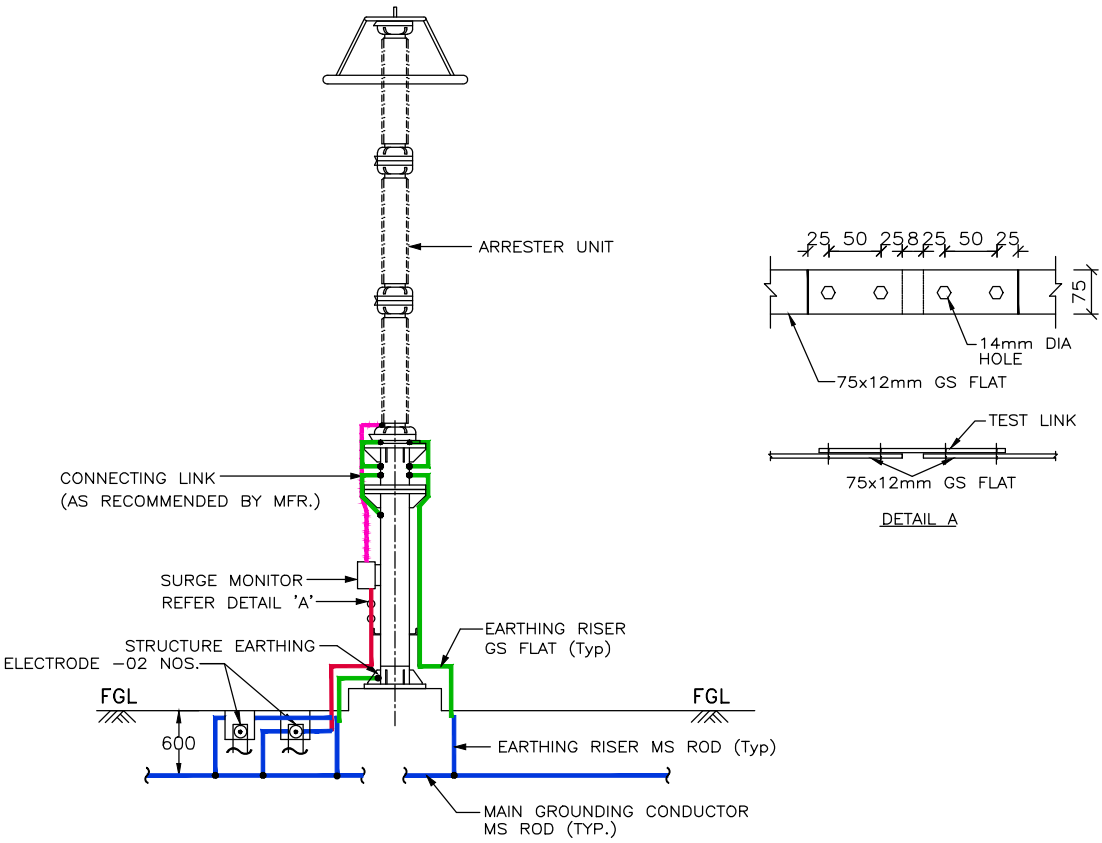

ELEVATION

LEGEND:

- 40mmø MS ROD
- 75 x 12 mm GS FLAT
- 50 x 6 mm GS FLAT
- CONNECTING LINK AS PER OEM

NOTES:

1. NO. OF RISERS= 4NOS./PHASE
2. NO. OF PIPE ELECTRODE IN TREATED PIT WITH TEST LINK= 2NOS./ PHASE
3. CLEAT CLAMP SHALL BE PROVIDED AT 1000MM INTERVAL.
4. SURGE COUNTER EARTHING SHALL NOT PAS THROUGH ANY PIPE AND SHALL HAVE SHORTEST LENGTH.

TYPICAL GROUNDING DETAILS OF 198KV LIGHTNING ARRESTER

WO/ LOA No.	LOA NO. RPRC182491/26286965 DTD.24.01.2020
NAME OF CUSTOMER:	INDIAN OIL CORPORATION LIMITED
NAME OF PROJECT:	LSTK JOB FOR ISBL WORK OF 220KV GRID POWER IMPORT AT PANIPAT REFINERY
NAME OF CONSULTANT:	TATA CONSULTING ENGINEERS LIMITED
ADDITIONAL INFORMATION W.O.No.	
STATUS OF DRAWING	
DISTRIBUTION OF PRINTS	

BHARAT HEAVY ELECTRICALS LTD.
TRANSMISSION PROJECTS DIVISION

	NAME	SIGN.	DATE
DRAWN	PK	-sd-	15.04.2020
CHECKED	DKS	-sd-	15.04.2020
APPROVED	VK	-sd-	15.04.2020

REV.	DATE	ALTERED	REV.	DATE	ALTERED	REV.	DATE	ALTERED
		CHECKED	02	05.08.20	PK / DKS / VK	01	23.07.20	PK / DKS / VK
		APPROVED						
ZONE			ZONE	AS PER CONSULTANT/ CUSTOMER COMMENTS DTD. 28.07.20 & 31.07.20 RESPECTIVELY		ZONE	AS PER CONSULTANT/ CUSTOMER COMMENTS DTD. 24.04.20 & 24.04.20 RESPECTIVELY	

DEPT. | CODE | SCALE | CARD CODE

TITLE: 220/33KV SWITCHYARD- EQUIPMENT EARTHING PHILOSOPHY AND DETAILS

DRAWING NO. TB-411-316-016 REV. 02

SHEET No. 18 NEXT SHEET 19

COPY RIGHT AND CONFIDENTIAL
The information on this document is the property of BHARAT HEAVY ELECTRICALS LIMITED
it must not be used directly or indirectly in anyway detrimental to the interest of the company.

DRAWING No. TB-411-316-016

APPENDIX-2: EQUIPMENT GROUNDING DETAILS

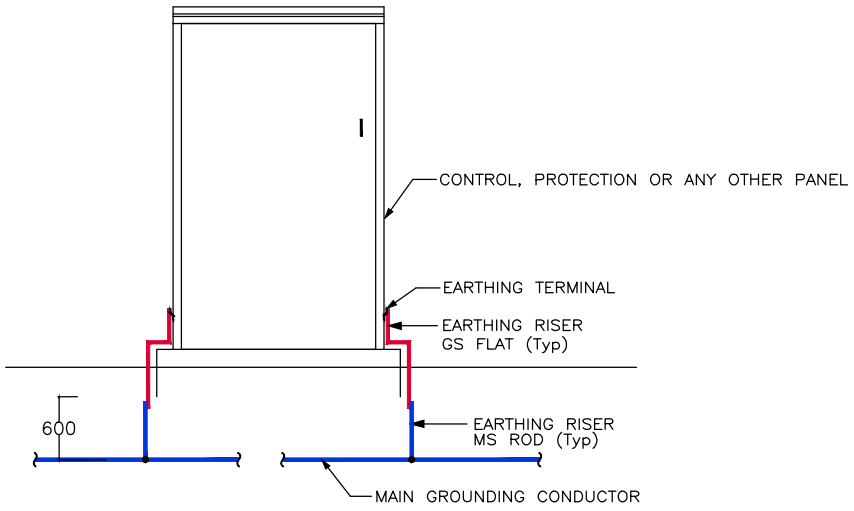

ELEVATION

LEGEND:

- 40mmø MS ROD
- 75 x 12 mm GS FLAT
- 50 x 6 mm GS FLAT

NOTES:

1. NO. OF RISERS= 2NOS.

TYPICAL GROUNDING DETAILS OF CONTROL, PROTECTION AND OTHER PANELS/ MV SWITCHGEAR

WO/ LOA No.	LOA NO. RPRC182491/26286965 DTD.24.01.2020
NAME OF CUSTOMER:	INDIAN OIL CORPORATION LIMITED
NAME OF PROJECT:	LSTK JOB FOR ISBL WORK OF 220KV GRID POWER IMPORT AT PANIPAT REFINERY
NAME OF CONSULTANT:	TATA CONSULTING ENGINEERS LIMITED

ADDITIONAL INFORMATION W.O.No.

STATUS OF DRAWING

DISTRIBUTION OF PRINTS

BHARAT HEAVY ELECTRICALS LTD. TRANSMISSION PROJECTS DIVISION

	NAME	SIGN.	DATE
DRAWN	PK	-sd-	15.04.2020
CHECKED	DKS	-sd-	15.04.2020
APPROVED	VK	-sd-	15.04.2020

REV.	DATE	ALTERED	REV.	DATE	ALTERED PK	REV.	DATE	ALTERED PK
		CHECKED	02	05.08.20	CHECKED DKS	01	23.07.20	CHECKED DKS
		APPROVED			APPROVED VK			APPROVED VK
ZONE			ZONE	AS PER CONSULTANT/ CUSTOMER COMMENTS DTD. 28.07.20 & 31.07.20 RESPECTIVELY		ZONE	AS PER CONSULTANT/ CUSTOMER COMMENTS DTD. 24.04.20 & 24.04.20 RESPECTIVELY	

DEPT. | CODE | SCALE | CARD CODE

TITLE: 220/33KV SWITCHYARD- EQUIPMENT EARTHING PHILOSOPHY AND DETAILS

DRAWING NO. TB-411-316-016 REV. 02

SHEET No. 19 NEXT SHEET 20

INVENTORY No.	SIGN. & DATE	REF. DRG. No.	COMPUTER DRG. PATH NAME :

COPY RIGHT AND CONFIDENTIAL
The information on this document is the property of BHARAT HEAVY ELECTRICALS LIMITED
it must not be used directly or indirectly in anyway detrimental to the interest of the company.

DRAWING No. TB-411-316-016

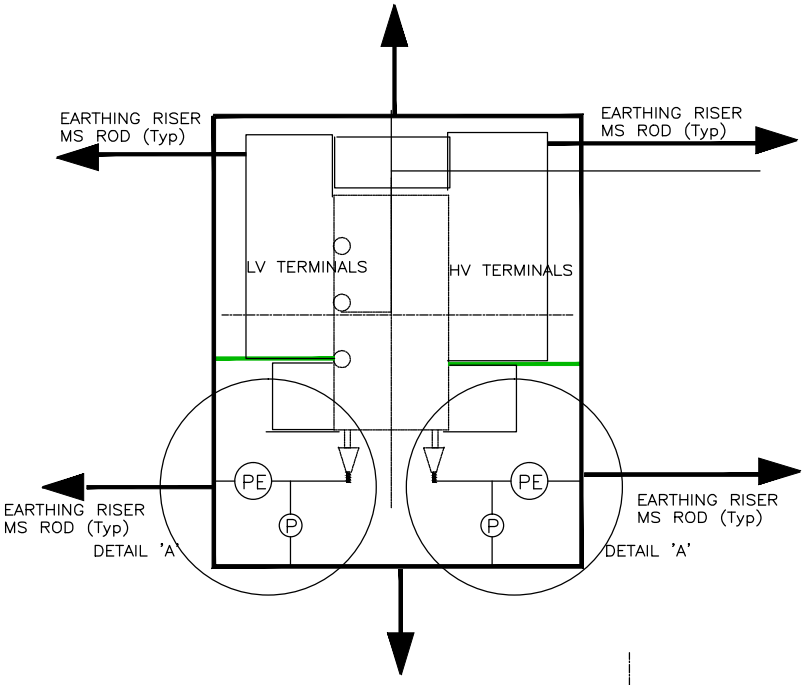

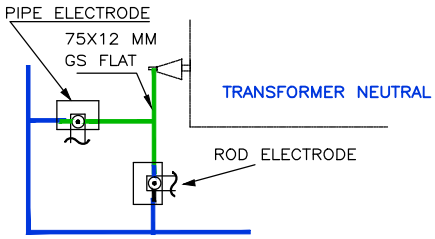

DETAIL A

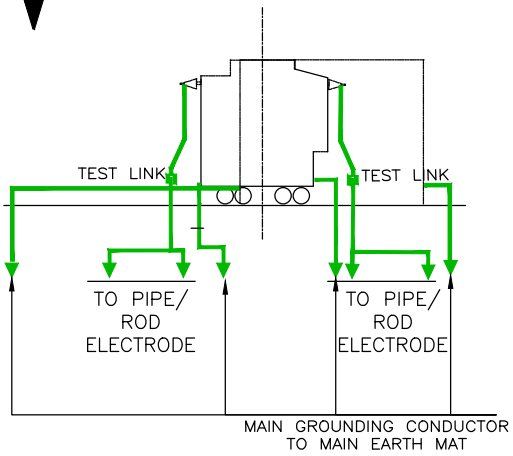

ELEVATION

LEGEND:

- 40mmø MS ROD
- 75 x 12 mm GS FLAT
- 50 x 6 mm GS FLAT

NOTES:

1. NO. OF RISERS= 6NOS./TRANSFORMER
2. NO. OF PIPE ELECTRODE IN TREATED PIT WITH TEST LINK= 2NOS./ TRANSFORMER
3. NO. OF ROD ELECTRODE IN TREATED PIT WITH TEST LINK= 2NOS./ TRANSFORMER
4. SEPARATE EARTHING SHALL BE PROVIDED TO MB, OLTC, NIFPS PANEL ETC.

TYPICAL GROUNDING DETAILS OF AUX./GT/ST/UAT/ICT TRANSFORMER

W.O/ LOA No.	LOA NO. RPRC182491/26286965 DTD.24.01.2020
NAME OF CUSTOMER:	INDIAN OIL CORPORATION LIMITED
NAME OF PROJECT:	LSTK JOB FOR ISBL WORK OF 220KV GRID POWER IMPORT AT PANIPAT REFINERY
NAME OF CONSULTANT:	TATA CONSULTING ENGINEERS LIMITED
ADDITIONAL INFORMATION W.O.No.	
STATUS OF DRAWING	
DISTRIBUTION OF PRINTS	

BHARAT HEAVY ELECTRICALS LTD.
TRANSMISSION PROJECTS DIVISION

	NAME	SIGN.	DATE
DRAWN	PK	-sd-	15.04.2020
CHECKED	DKS	-sd-	15.04.2020
APPROVED	VK	-sd-	15.04.2020

REV.	DATE	ALTERED / CHECKED / APPROVED	REV.	DATE	ALTERED / CHECKED / APPROVED	REV.	DATE	ALTERED / CHECKED / APPROVED
			02	05.08.20	PK / DKS / VK	01	23.07.20	PK / DKS / VK
ZONE			ZONE	AS PER CONSULTANT/ CUSTOMER COMMENTS DTD. 28.07.20 & 31.07.20 RESPECTIVELY		ZONE	AS PER CONSULTANT/ CUSTOMER COMMENTS DTD. 24.04.20 & 24.04.20 RESPECTIVELY	

DEPT. | CODE | SCALE | CARD CODE

TITLE: 220/33KV SWITCHYARD– EQUIPMENT EARTHING PHILOSOPHY AND DETAILS

DRAWING NO. TB-411-316-016 REV. 02

SHEET No. 20 NEXT SHEET 21

INVENTORY No.	SIGN. & DATE	REF. DRG. No.	COMPUTER DRG. PATH NAME :

COPY RIGHT AND CONFIDENTIAL
The information on this document is the property of BHARAT HEAVY ELECTRICALS LIMITED
It must not be used directly or indirectly in anyway detrimental to the interest of the company.

DRAWING No. TB-411-316-016

APPENDIX-2: EQUIPMENT GROUNDING DETAILS

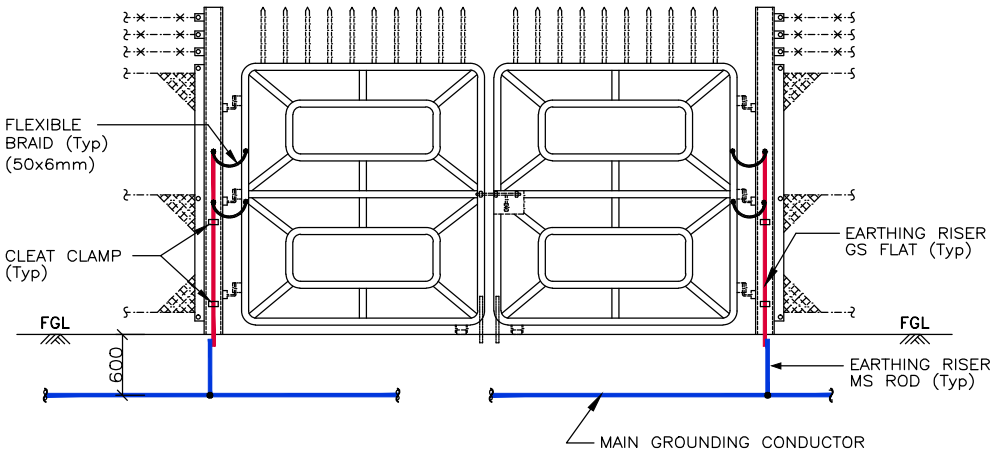

MAIN GATE ELEVATION

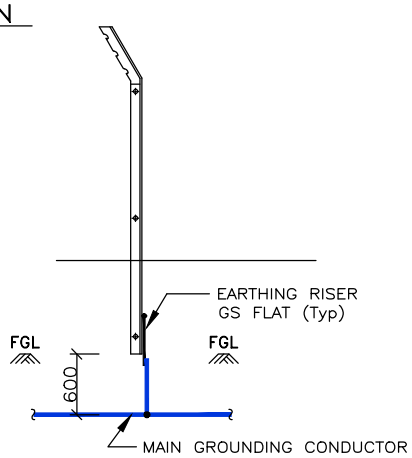

FENCE POST (ALTERNATE FENCE POST) ELEVATION

LEGEND:

- 40mmø MS ROD
- 75 x 12 mm GS FLAT
- 50 x 6 mm GS FLAT

NOTES:

		FENCE POST	MAIN GATE
1.	NO. OF RISERS REQUIED	1	2
2.	NO. OF FLEXIBLE BRAID	–	4

3. ALL GATES & EVERY ALTERNATE FENCE POST SHALL BE CONNECTED TO GROUNDING GRID.
4. ALTERNATE FENCE POST SHALL BE GROUNDED.
5. IN ADDITION TO THIS, FENCE POST SHALL BE GROUNDED WITH ROD ELECTODE AT CORNERS.

TYPICAL GROUNDING DETAILS OF FENCE GATE

WO/ LOA No.	LOA NO. RPRC182491/26286965 DTD.24.01.2020		
ADDITIONAL INFORMATION W.O.No.	NAME OF CUSTOMER:	INDIAN OIL CORPORATION LIMITED	
STATUS OF DRAWING	NAME OF PROJECT:	LSTK JOB FOR ISBL WORK OF 220KV GRID POWER IMPORT AT PANIPAT REFINERY	
DISTRIBUTION OF PRINTS	NAME OF CONSULTANT:	TATA CONSULTING ENGINEERS LIMITED	

BHARAT HEAVY ELECTRICALS LTD.
TRANSMISSION PROJECTS DIVISION

	NAME	SIGN.	DATE
DRAWN	PK	–sd–	15.04.2020
CHECKED	DKS	–sd–	15.04.2020
APPROVED	VK	–sd–	15.04.2020

REV.	DATE	ALTERED / CHECKED / APPROVED	REV.	DATE	ALTERED / CHECKED / APPROVED	REV.	DATE	ALTERED / CHECKED / APPROVED
			02	05.08.20	PK / DKS / VK	01	23.07.20	PK / DKS / VK
ZONE			ZONE	AS PER CONSULTANT/ CUSTOMER COMMENTS DTD. 28.07.20 & 31.07.20 RESPECTIVELY		ZONE	AS PER CONSULTANT/ CUSTOMER COMMENTS DTD. 24.04.20 & 24.04.20 RESPECTIVELY	

DEPT. | CODE | SCALE | CARD CODE

TITLE: 220/33KV SWITCHYARD– EQUIPMENT EARTHING PHILOSOPHY AND DETAILS

DRAWING NO. TB-411-316-016 REV. 02

SHEET No. 21 NEXT SHEET 22

INVENTORY No.	SIGN. & DATE	REF. DRG. No.	COMPUTER DRG. PATH NAME :

COPY RIGHT AND CONFIDENTIAL
The information on this document is the property of BHARAT HEAVY ELECTRICALS LIMITED
It must not be used directly or indirectly in anyway detrimental to the interest of the company.

DRAWING No. TB-411-316-016

APPENDIX-2: EQUIPMENT GROUNDING DETAILS

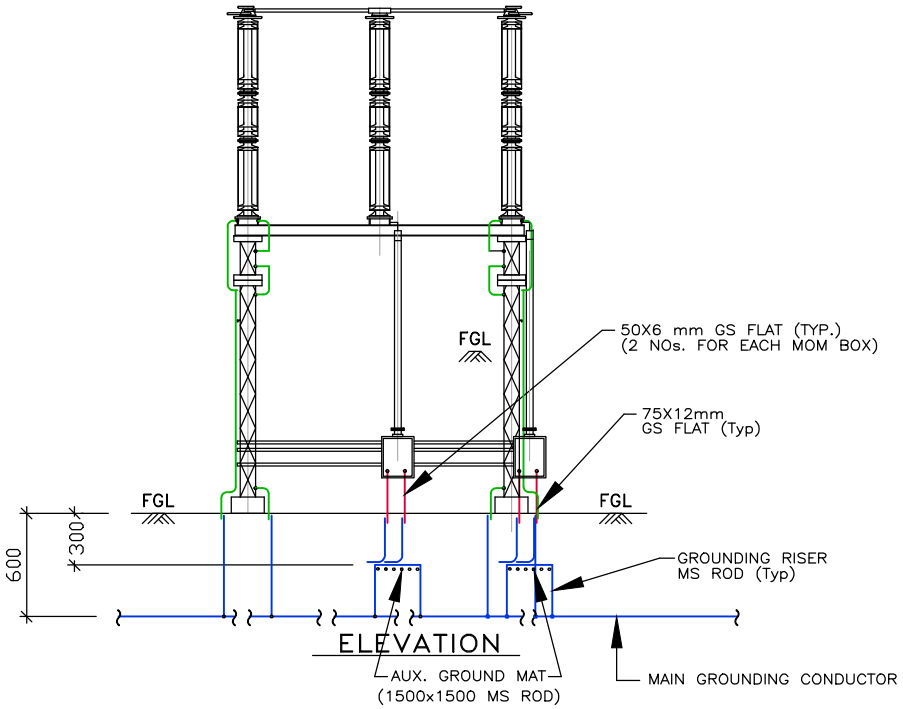

LEGEND:

- 40mmø MS ROD
- 75x12 mm GS FLAT
- 50x6 mm GS FLAT

NOTES:

1. CLEAT CLAMP SHALL BE PROVIDED AT 1000mm INTERVAL

TYPICAL GROUNDING DETAILS OF 220KV ISOLATOR WITH ONE (1) EARTH SWITCH

WO/ LOA No.	LOA NO. RPRC182491/26286965 DTD.24.01.2020
NAME OF CUSTOMER:	INDIAN OIL CORPORATION LIMITED
NAME OF PROJECT:	LSTK JOB FOR ISBL WORK OF 220KV GRID POWER IMPORT AT PANIPAT REFINERY
NAME OF CONSULTANT:	TATA CONSULTING ENGINEERS LIMITED
ADDITIONAL INFORMATION W.O.No.	
STATUS OF DRAWING	
DISTRIBUTION OF PRINTS	

BHARAT HEAVY ELECTRICALS LTD.
TRANSMISSION PROJECTS DIVISION

	NAME	SIGN.	DATE
DRAWN	PK	-sd-	15.04.2020
CHECKED	DKS	-sd-	15.04.2020
APPROVED	VK	-sd-	15.04.2020

REV.	DATE	ALTERED / CHECKED / APPROVED	REV.	DATE	ALTERED / CHECKED / APPROVED	REV.	DATE	ALTERED / CHECKED / APPROVED
			02	05.08.20	PK / DKS / VK	01	23.07.20	PK / DKS / VK
ZONE			ZONE	AS PER CONSULTANT/ CUSTOMER COMMENTS DTD. 28.07.20 & 31.07.20 RESPECTIVELY		ZONE	AS PER CONSULTANT/ CUSTOMER COMMENTS DTD. 24.04.20 & 24.04.20 RESPECTIVELY	

DEPT. | CODE | SCALE | CARD CODE

TITLE: 220/33KV SWITCHYARD- EQUIPMENT EARTHING PHILOSOPHY AND DETAILS

DRAWING NO. TB-411-316-016 REV. 02

SHEET No. 22 NEXT SHEET 23

INVENTORY No.	SIGN. & DATE	REF. DRG. No.	COMPUTER DRG. PATH NAME :

COPY RIGHT AND CONFIDENTIAL
The information on this document is the property of BHARAT HEAVY ELECTRICALS LIMITED
It must not be used directly or indirectly in anyway detrimental to the interest of the company.

DRAWING No. TB-411-316-016

APPENDIX-2 : EQUIPMENT GROUNDING DETAILS

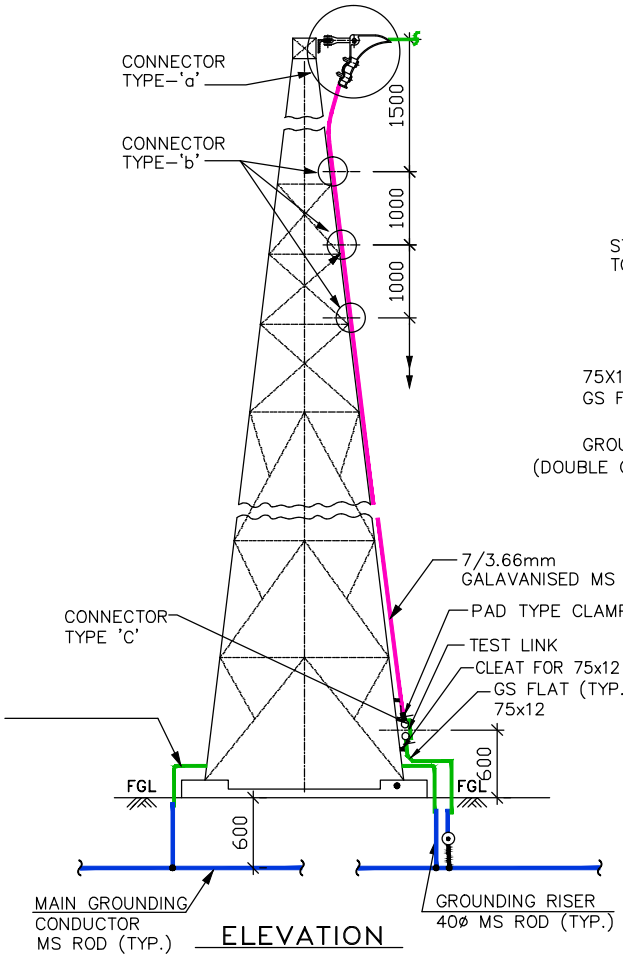

ELEVATION

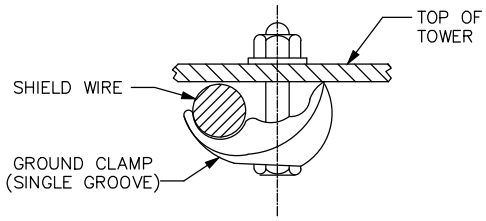

TYPE – 'b'
(CLEAT TYPE CLAMP)

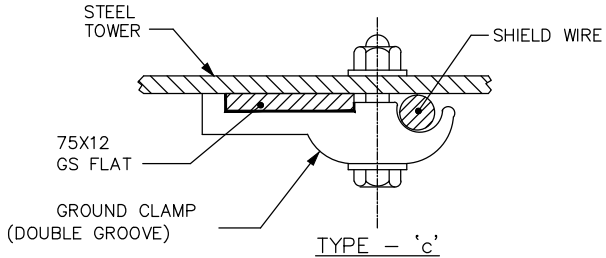

TYPE – 'c'
(PAD TYPE CLAMP)

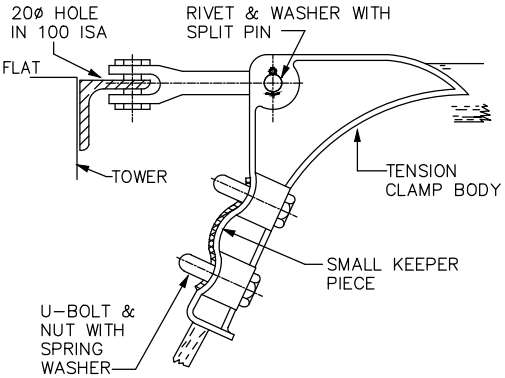

TYPE-'a'

LEGEND:

- 40mmø MS ROD
- 75x12 mm GS FLAT
- 50x6 mm GS FLAT
- 10.98 DIA EARTH WIRE

NOTES:

1. NO. OF RISERS= 3NOS.
2. NO. OF ROD ELECTRODE WITH TEST LINK= 1NOS.
3. CLEAT FOR SHIELD WIRE SHALL BE PROVIDED AT 2000MM INTERVAL.

TYPICAL ARRANGEMENTS FOR LIGHTNING PROTECTION BY SHIELD WIRE AND GROUNDING DETAILS OF 220KV TOWER WITH PEAK

WO/ LOA No.	LOA NO. RPRC182491/26286965 DTD.24.01.2020
NAME OF CUSTOMER:	INDIAN OIL CORPORATION LIMITED
NAME OF PROJECT:	LSTK JOB FOR ISBL WORK OF 220KV GRID POWER IMPORT AT PANIPAT REFINERY
NAME OF CONSULTANT:	TATA CONSULTING ENGINEERS LIMITED

ADDITIONAL INFORMATION W.O.No.
STATUS OF DRAWING
DISTRIBUTION OF PRINTS

BHARAT HEAVY ELECTRICALS LTD. TRANSMISSION PROJECTS DIVISION

	NAME	SIGN.	DATE
DRAWN	PK	-sd-	15.04.2020
CHECKED	DKS	-sd-	15.04.2020
APPROVED	VK	-sd-	15.04.2020

REV.	DATE	ALTERED / CHECKED / APPROVED	REV.	DATE	ALTERED / CHECKED / APPROVED	REV.	DATE	ALTERED / CHECKED / APPROVED
			02	05.08.20	PK / DKS / VK	01	23.07.20	PK / DKS / VK
ZONE			ZONE	AS PER CONSULTANT/ CUSTOMER COMMENTS DTD. 28.07.20 & 31.07.20 RESPECTIVELY		ZONE	AS PER CONSULTANT/ CUSTOMER COMMENTS DTD. 24.04.20 & 24.04.20 RESPECTIVELY	

DEPT. | CODE | SCALE | CARD CODE

TITLE: 220/33KV SWITCHYARD- EQUIPMENT EARTHING PHILOSOPHY AND DETAILS

DRAWING NO. TB-411-316-016 REV. 02

SHEET No. 23 NEXT SHEET 24

INVENTORY No.	SIGN. & DATE	REF. DRG. No.	COMPUTER DRG. PATH NAME :

COPY RIGHT AND CONFIDENTIAL
The information on this document is the property of BHARAT HEAVY ELECTRICALS LIMITED
it must not be used directly or indirectly in anyway detrimental to the interest of the company.

DRAWING No. TB-411-316-016

APPENDIX-2 : EQUIPMENT GROUNDING DETAILS

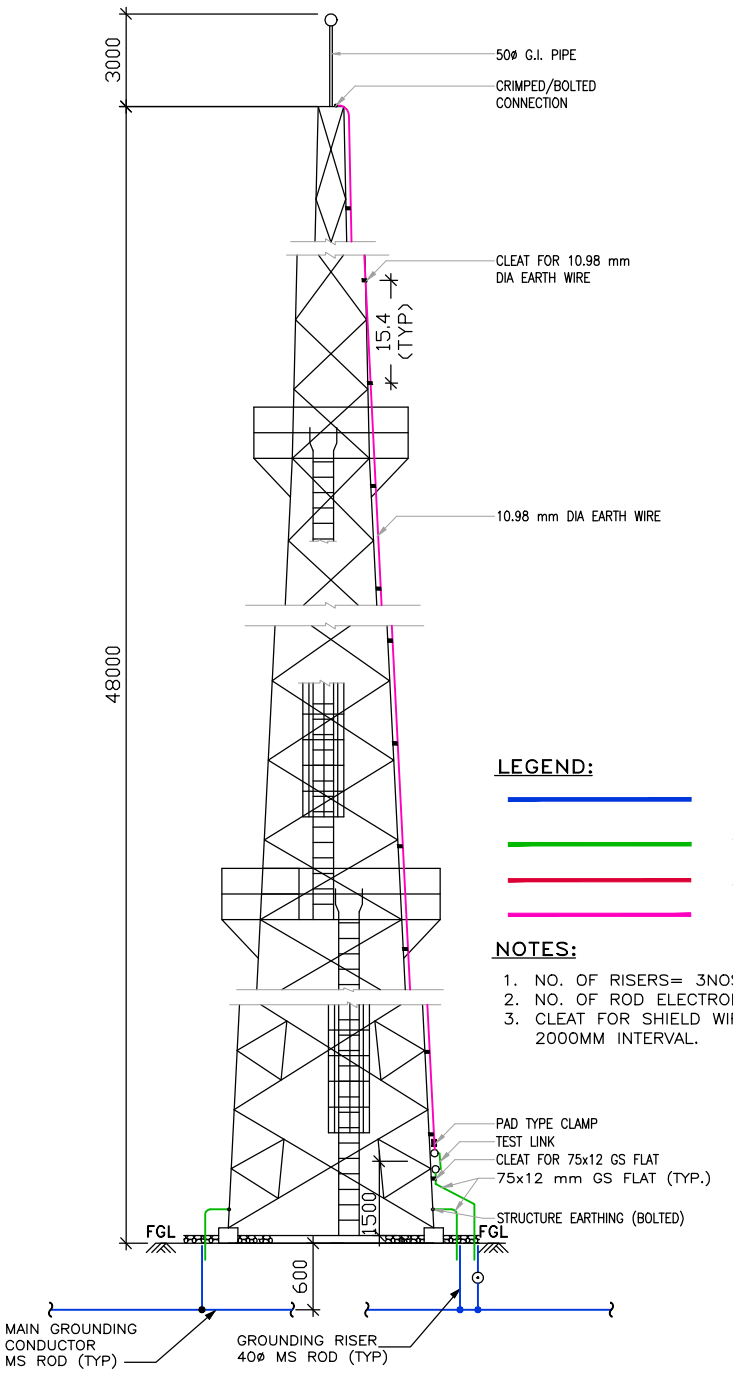

LEGEND:

- 40mmø MS ROD
- 75x12 mm GS FLAT
- 50x6 mm GS FLAT
- 10.98 DIA EARTH WIRE

NOTES:

1. NO. OF RISERS= 3NOS.
2. NO. OF ROD ELECTRODE WITH TEST LINK= 1NOS.
3. CLEAT FOR SHIELD WIRE SHALL BE PROVIDED AT 2000MM INTERVAL.

ELEVATION

TYPICAL ARRANGEMENTS FOR LIGHTNING PROTECTION BY SHIELD WIRE AND GROUNDING DETAILS OF LIGHTING CUM LIGHTNING MAST

WO/ LOA No.	LOA NO. RPRC182491/26286965 DTD.24.01.2020
NAME OF CUSTOMER:	INDIAN OIL CORPORATION LIMITED
NAME OF PROJECT:	LSTK JOB FOR ISBL WORK OF 220KV GRID POWER IMPORT AT PANIPAT REFINERY
NAME OF CONSULTANT:	TATA CONSULTING ENGINEERS LIMITED

ADDITIONAL INFORMATION W.O.No.

STATUS OF DRAWING

DISTRIBUTION OF PRINTS

BHARAT HEAVY ELECTRICALS LTD. TRANSMISSION PROJECTS DIVISION

	NAME	SIGN.	DATE
DRAWN	PK	-sd-	15.04.2020
CHECKED	DKS	-sd-	15.04.2020
APPROVED	VK	-sd-	15.04.2020

REV.	DATE	ALTERED / CHECKED / APPROVED	REV.	DATE	ALTERED / CHECKED / APPROVED	REV.	DATE	ALTERED / CHECKED / APPROVED
			02	05.08.20	PK / DKS / VK	01	23.07.20	PK / DKS / VK
ZONE			ZONE	AS PER CONSULTANT/ CUSTOMER COMMENTS DTD. 28.07.20 & 31.07.20 RESPECTIVELY		ZONE	AS PER CONSULTANT/ CUSTOMER COMMENTS DTD. 24.04.20 & 24.04.20 RESPECTIVELY	

DEPT. / CODE | SCALE | CARD CODE

TITLE: 220/33KV SWITCHYARD- EQUIPMENT EARTHING PHILOSOPHY AND DETAILS

DRAWING NO. TB-411-316-016 REV. 02

SHEET No. 24 NEXT SHEET –

FIRST ANGLE PROJECTION (ALL DIMENSIONS ARE IN mm)

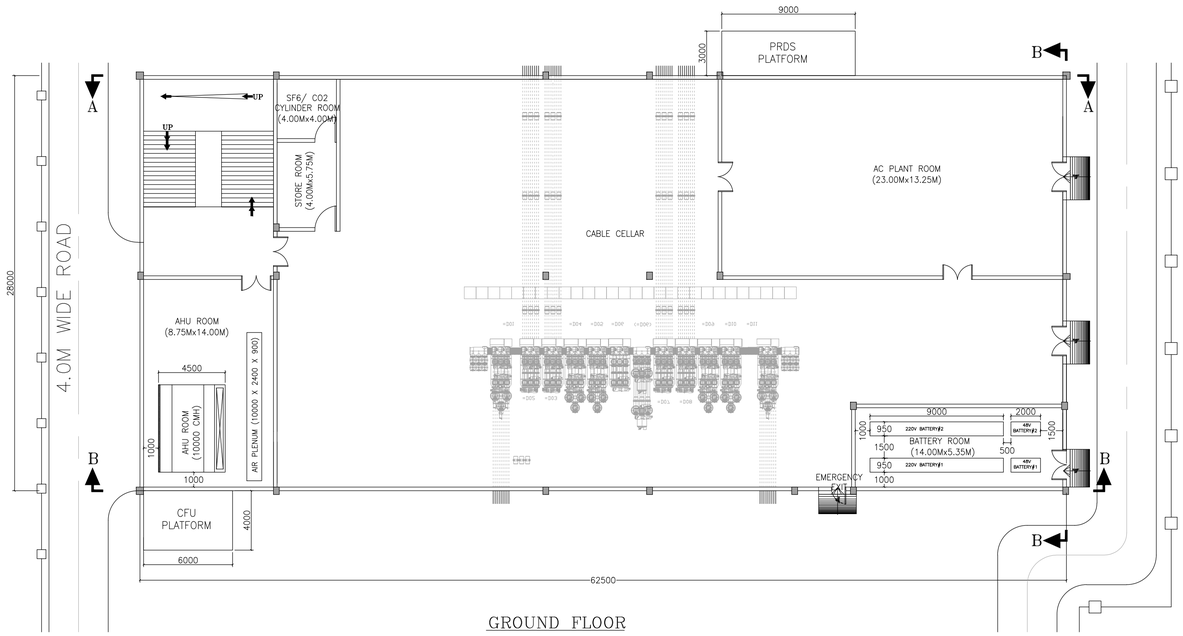

GROUND FLOOR

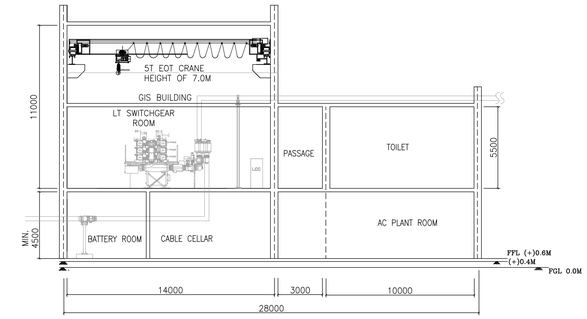

SECTION C–C

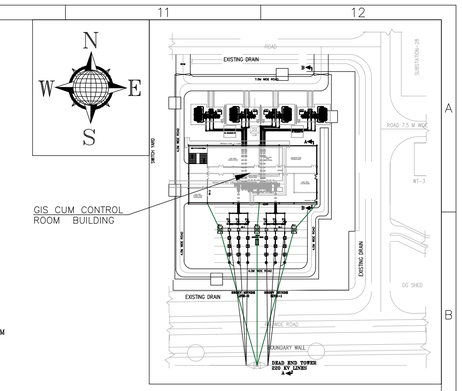

KEY PLAN

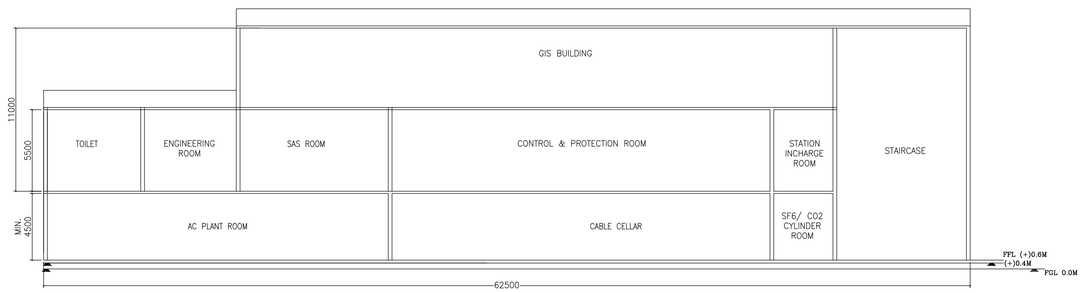

SECTION A–A

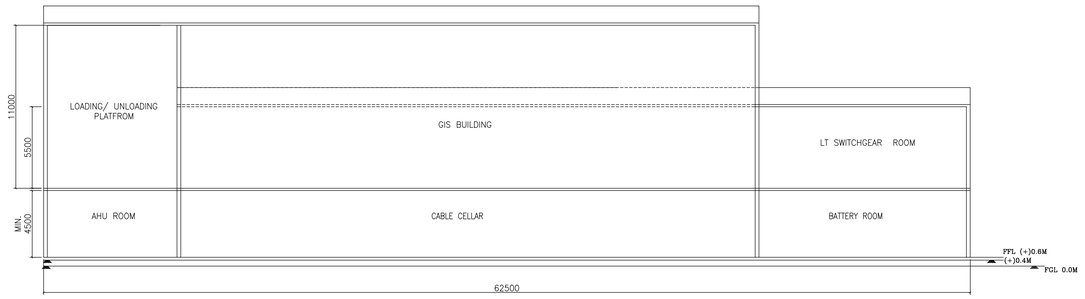

SECTION B–B

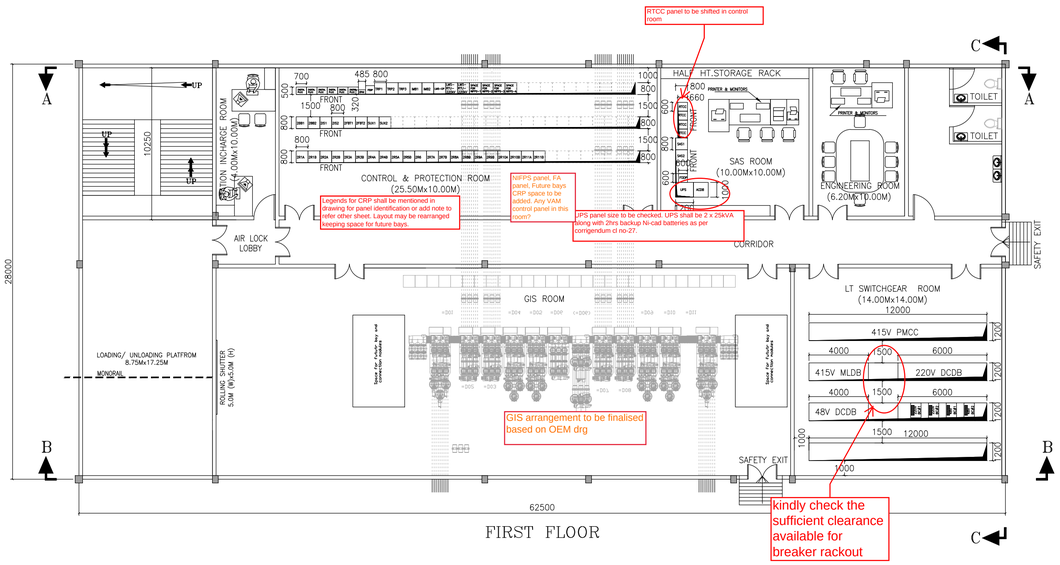

FIRST FLOOR

TATA CONSULTING ENGINEERS LIMITED
VENDOR DOCUMENT REVIEW STATUS

- ☑ A. Document approved as submitted; proceed with fabrication/construction.
- ☐ B. Document approved subject to comments noted; proceed with fabrication/construction considering our comments.
- ☑ C. Our comments are noted on this marked up print.
- ☐ D. Our comments are noted in the memo attached to the forwarding transmittal Letter No.... Dated ....
- ☐ E. Correct original of this document to reflect our comments and resubmit for approval.
- ☐ F. Correct original of this document to reflect our comments and resubmitted for records.
- ☐ G. Document of this category are for information only and not for approval. Information furnished on the document is noted.
- ☐ H. Document reviewed against our previous comments and other revisions highlighted and identified by the vendor.
- ☐ I. Document returned without review.

Approval conveyed herein neither relieves Vendor/Contractor of his contractual obligations and his responsibilities for correctness of dimensions, materials of construction, weights, quantities, design details, assembly fits, system/performance requirements and conformity of supplies with Indian Statutory Laws as may be applicable, nor does it limit the Purchaser's rights under the contract.

Reviewed by SRP/AKN Date 20.07.2020

Approved for conceptual layout. Same shall be further revised based on actual OEM GA etc and Civil and ARch drgs for rooms. BHEL to comply with comments given earlier in detail Engineering.

REFERENCE DRAWING (S)/ DOCUMENT(S) –

SL. NO.	DRAWING/ DOCUMENT NO.	DRAWING TITLE
2.	TB-411-316-011	220/33kV SWITCHYARD- LAYOUT PLAN & SECTION
1.	TB-411-510-001	220/33kV SWITCHYARD- SINGLE LINE DIAGRAM

PROJECT: LSTK JOB FOR ISBL WORK OF 220kV GRID POWER IMPORT AT PANIPAT REFINERY
LOA NO. RPRC182491/26286965 DTD.24.01.2020

OWNER: INDIAN OIL CORPORATION LIMITED

CONSULTANT: TATA CONSULTING ENGINEERS LIMITED

भारत हेवी इलेक्ट्रिकल्स लिमिटेड
ट्रांसमिशन परियोजना विभाग
BHARAT HEAVY ELECTRICALS LTD.
TRANSMISSION PROJECTS DIVISION

	NAME	SIGN.	DATE
DRN.	PK	–SD–	10.02.2020
CHD.	DKS	–SD–	10.02.2020
APPD.	VK	–SD–	10.02.2020

REV.	DATE	ALTERED	CHECKED	APPROVED	ZONE
04	20.07.20	PK	DKS	VK	AS PER CONSULATNT/ CUSTOMER COMMENTS ON DTD. 19.06.2020 & 19.06.2020 RESPECTIVELY & FURTHER INPUTS FROM MECHANICAL GROUP.
03	17.06.20	PK	DKS	VK	AS PER CONSULATNT/ CUSTOMER COMMENTS ON DTD. 07.05.2020 & 07.05.2020 RESPECTIVELY & FURTHER INPUTS FROM MECHANICAL GROUP.
02	28.04.20	PK	DKS	VK	AS PER CONSULATNT/ CUSTOMER COMMENTS ON DTD. 21.04.2020 & 24.04.2020 RESPECTIVELY.
01	14.04.20	PK	DKS	VK	AS PER CUSTOMER COMMENTS ON DTD. 06.03.2020 DURING MEETING AT IOCL PANIPAT OFFICE

DEPT.	UNTOL. DIMS.	SCALE	WEIGHT (KG)	REF. TO ASSY. DRG.	ITEM NO.	NO.OF ITEMS
TBEM CODE: 411	GR. ~~C/M/F~~	–N.A.–	–N.A.–	–N.A.–	–N.A.–	–N.A.–

TITLE: GIS CUM CONTROL ROOM BUILDING – CONCEPTUAL LAYOUT

DRAWING/ DOCUMENT NO. TB-411-316-020 REV. 04

SHT. No 01 NO. OF SHT. 02

THE INFORMATION ON THIS DOCUMENT IS THE PROPERTY OF BHARAT HEAVY ELECTRICALS LIMITED, IT MUST NOT BE USED DIRECTLY OR INDIRECTLY IN ANY WAY DETRIMENTAL TO THE INTEREST OF THE COMPANY

COMPUTER FILE NAME | REF. DRG. NO. | SIGN. AND DATE | INVENTORY NO

SIZE–A1

FIRST ANGLE PROJECTION

(ALL DIMENSIONS ARE IN mm)

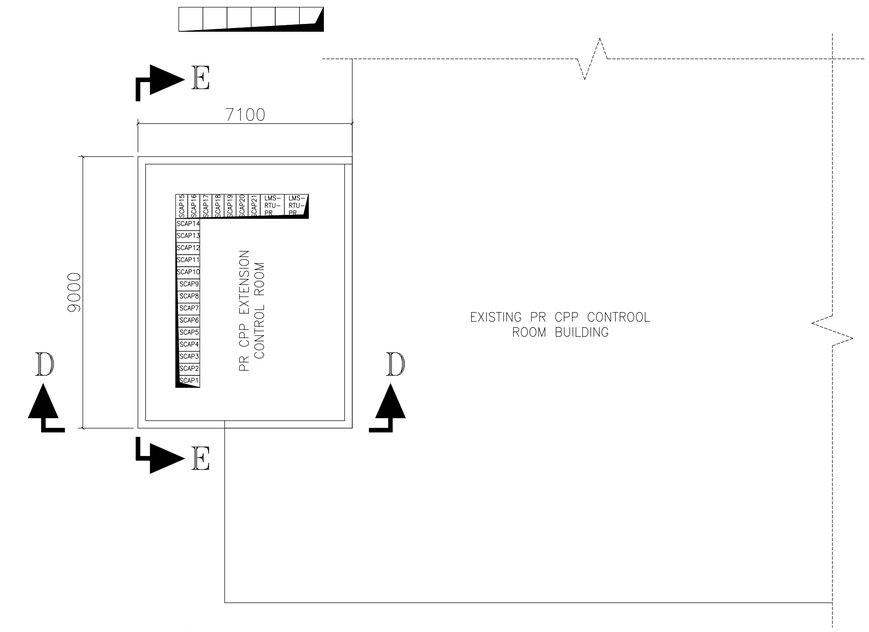

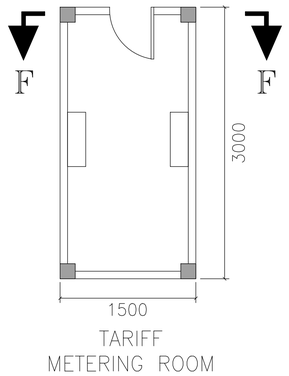

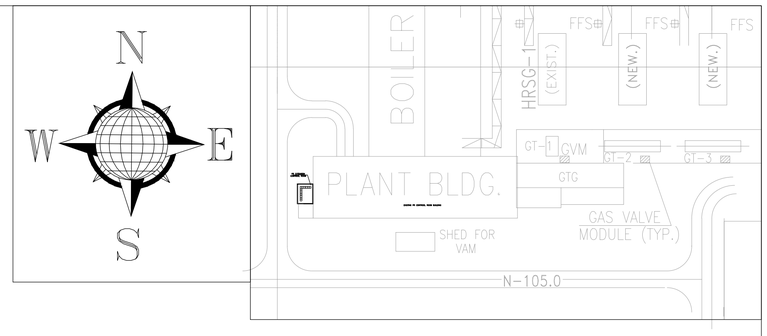

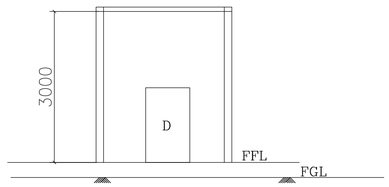

SECTION F-F

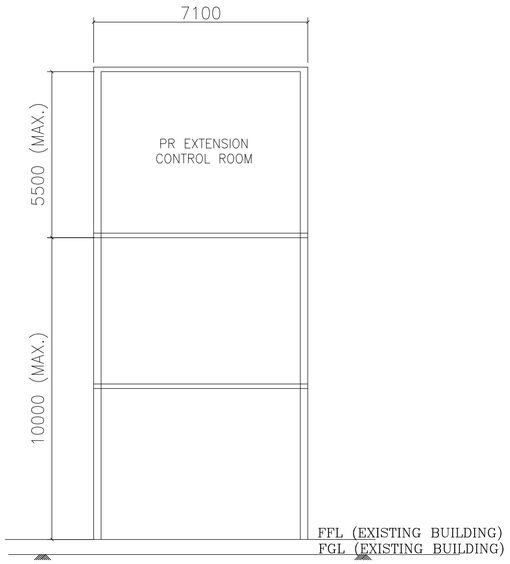

SECTION D-D

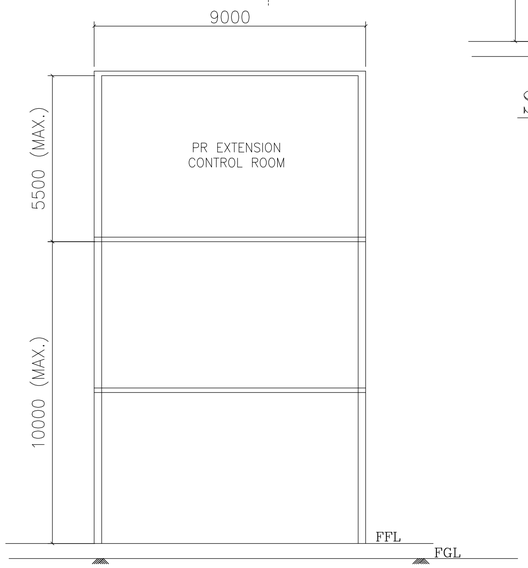

SECTION E-E

NOTES-

1. ALL DIMENSIONS ARE IN MM.
2. CLEARANCES SHOWN ARE MINIMUM ELECTRICAL CLEARANCES AND HENCE ANY CIVIL HINDRANCES SHALL BE OUTSIDE OF THIS ELECTRICAL CLEARANCES SHOWN IN THE DRAWING. FOR GROUND FLOOR, CLEAR HEIGHT SHALL BE MIN. 4.5 METERS.
3. PR EXTENSION CPP CONTROL ROOM SHALL BE CONSTRUCTED IN LINE WITH DIMENSIONS MATCHING WITH EXISTING CONTROL ROOM BUILDING, MEASURED AT SITE.
4. IN PR EXTENSION CPP CONTROL ROOM BUILDING, FACILITIES FOR ILLUMINATION, AC & VENTILATION SHALL BE EXTENDED.
5. BUILDINGS LOCATIONS SHALL BE IN LINE WITH DETAILS SHOWN IN LAYOUT DRAWING.
6. SIZES OF ROOMS AND LOCATIONS SHALL BE INCREASED OR DECREASED BASED ON THE FINAL & EXACT DETAILS FROM OEMS.
7. DIMENSIONS SHOWN IN PR EXTENSION CPP CONTROL ROOM IS TENTATIVE AND SHALL MATCH WITH EXISTING BUILDING AND THERE SHALL BE COMPLETE ACCESS WITH EXISTING CONTROL ROOM.
8. ARCHITECTURAL AND CIVIL DETAILS OF THE BUILDING SHALL BE PROVIDED IN CIVIL DRAWINGS/ DOCUMENTS, WHICH SHALL BE SUBMITTED SEPARATELY.
9. THE FFL LEVEL FOR GIS CUM CONTROL ROOM SHALL MATCH WITH THE FFL LEVEL OF SS-28
10. MONORAIL SHALL BE PROVIDED IN AC PLANT ROOM. FOUNDATIONS FOR AC EQUIPMENT SHALL BE PROVIDED IN AC PLANT ROOM. DETAILS FOR THE SAME SHALL BE PROVIDE AT LATER STAGE.
11. UNDER DECK INSULATION WITH FALSE CEILING SHALL BE PROVIDED FOR ALL THE AC AREAS SUCH AS CONTROL ROOM, SAS ROOM, STATION IN-CHARGE ROOM, ENGINEERING ROOM, GIS HALL, ACDB/DCDB ROOM, HOWEVER, CORRIDOR SHALL BE PROVIDED WITH FALSE CEILING ONLY.
12. AC PLANT ROOM SHALL HAVE HEAVY DUTY FLOORING.
13. STAIRCASE ARRANGEMENT SHALL BE PROVIDED FOR SAFETY EXITS FROM FIRST FLOOR IN GIS CUM CONTROL ROOM BUILDING.

THE INFORMATION ON THIS DOCUMENT IS THE PROPERTY OF BHARAT HEAVY ELECTRICALS LIMITED. IT MUST NOT BE USED DIRECTLY OR INDIRECTLY IN ANY WAY DETRIMENTAL TO THE INTEREST OF THE COMPANY

COMPUTER FILE NAME | REF. DRG. NO. | SIGN. AND DATE | INVENTORY NO

REV.	DATE			ZONE
04	20.07.20	ALT	PK	AS PER CONSULATNT/ CUSTOMER COMMENTS ON DTD. 19.06.2020 & 19.06.2020 RESPECTIVELY & FURTHER INPUTS FROM MECHANICAL GROUP.
		CHD	DKS	
		APPD	VK	
03	17.06.20	ALT	PK	AS PER CONSULATNT/ CUSTOMER COMMENTS ON DTD. 07.05.2020 & 07.05.2020 RESPECTIVELY & FURTHER INPUTS FROM MECHANICAL GROUP.
		CHD	DKS	
		APPD	VK	
02	28.04.20	ALT	PK	AS PER CONSULATNT/ CUSTOMER COMMENTS ON DTD. 21.04.2020 & 24.04.2020 RESPECTIVELY.
		CHD	DKS	
		APPD	VK	
01	14.04.20	ALT	PK	AS PER CUSTOMER COMMENTS ON DATED 06.03.2020 DURING MEETING AT IOCL PANIPAT OFFICE
		CHD	DKS	
		APPD	VK	

CUSTOMER: LSTK JOB FOR ISBL WORK OF 220kV GRID POWER IMPORT AT PANIPAT REFINERY
LOA NO. RPRC182491/26286965 DTD.24.01.2020

OWNER: INDIAN OIL CORPORATION LIMITED

CONSULTANT: TATA CONSULTING ENGINEERS LIMITED

भारत हेवी इलेक्ट्रिकल्स लिमिटेड
ट्रांसमिशन परियोजना विभाग
BHARAT HEAVY ELECTRICALS LTD.
TRANSMISSION PROJECTS DIVISION

	NAME	SIGN.	DATE
DRN.	PK	-SD-	10.02.2020
CHD.	DKS	-SD-	10.02.2020
APPD.	VK	-SD-	10.02.2020

DEPT. TBEM	UNTOL. DIMS. GR.	SCALE	WEIGHT (KG)	REF. TO ASSY. DRG.	ITEM NO.	NO.OF ITEMS
CODE 411	g/m/f	N.T.S	N.A.	N.A.	N.A.	N.A.

TITLE: GIS CUM CONTROL ROOM BUILDING - CONCEPTUAL LAYOUT

DRAWING/ DOCUMENT NO. TB-411-316-020 REV. 04

SHT. No 02 NO. OF SHT. 02

SIZE-A3

PANEL/ BOARDS DETAILS

IOCL, Panipat Project

		Designation	QTY		ACTUAL			Total Width
					W	D	H	
A. 220kV GIS cum Control Room Building								
1. CONTROL & PROTECTION ROOM								
LINE-1	Bay-201	2R1A, 2R1B	2	No	800	800	2315	1600
PR TRAFO-1	Bay-202	2R2A, 2R2B	2	No	800	800	2315	1600
PNCP TRAFO-1	Bay-203	2R3A, 2R3B	2	No	800	800	2315	1600
SPARE BAY-1	Bay-204	2R4A, 2R4B	2	No	800	800	2315	1600
SPARE BAY-2	Bay-205	2R5A, 2R5B	2	No	800	800	2315	1600
BUS COUPLER	Bay-206	2R6	1	No	800	800	2315	800
PR TRAFO-2	Bay-207	2R7A, 2R7B	2	No	800	800	2315	1600
PNCP TRAFO-2	Bay-208	2R8A, 2R8B	2	No	800	800	2315	1600
SPARE BAY-3	Bay-209	2R9A, 2R9B	2	No	800	800	2315	1600
SPARE BAY-4	Bay-210	2R10A, 2R10B	2	No	800	800	2315	1600
LINE-2	Bay-211	2R11A, 2R11B	2	No	800	800	2315	1600
220kV BUSBAR PROTN PANEL		2BB1, 2BB2	2	No	800	800	2315	1600
220kV GRID ISLANDING PANEL		2IS1, 2IS2	2	No	800	800	2315	1600
220kV FAST BUS TRANSFER PANEL		2FBT1, 2FBT2	2	No	800	800	2315	1600
AUXILIARY BCU PANEL		SUX1, SUX2	2	No	800	800	2312	1600
RTCC PANEL		RTCC	4	No	660	600	2295	2640
COMUNICATION EQUIPMENTS		DIGITAL PLCC	6	No	700	500	2230	4200
		EPAX	1	No	485	320	220	485
		FODP	1	No	600	600	2200	600
CENTRAL TRANSDUCER PANELS		TRP1, TRP2, TRP3	3	No	800	800	2315	2400
IMB Panel (for Existing PR ECS I/f)		IMB1, IMB2	2	No	800	800	2315	1600
LMS SYSTEM (CENTRAL UNIT PANEL)		LMS-CP	1	No	800	800	2315	800
LMS SYSTEM (RTU PANEL)		LMS-RTU-220kV	2	No	800	800	2315	1600
2. SAS ROOM								
SAS NETWORKING PANEL		SAS1, SAS2	2	No	800	800	2315	1600
PLCC MODEM PANEL			1	No	800	800	2312	800
COMUNICATION EQUIPMENTS		FODP	1	No	600	600	2200	600
UPS PANEL WITH ACDB		UPS+ACDB	1	No	1200	1000	2315	1200
	OTHER SAS EQUIPMENTS							
	2 OWS + 1 EWS + 2 PRINTERS(A3) + 1 PRINTERS(A4) + 2 INVERTERS/UPS + FURNITURE							
3. ENGINEERING ROOM								
	OTHER SAS EQUIPMENTS							
	1 EWS + 1 Historian Server PC + 1 DR PC + 1 PRINTERS(A4) + FURNITURE							
4. LT SWITCHGEAR ROOM								
415V PMCC			1	No	12000	1200	2450	12000
415V MLDB			1	No	4000	1200	2450	4000
220V DCDB			1	No	6000	1100	2450	6000
48V DCDB			1	No	4000	1100	2450	4000
220V BATTERY CHARGER			2	No	700	1000	1900	1400
48V BATTERY CHARGER			2	No	700	1000	1900	1400

5. BATTERY ROOM								
220V BATTERY BANK			2	No	9000	950	1500	18000
48V BATTERY BANK			2	No	2000	950	1500	4000
6. AC PLANT ROOM								
415V VAM MCC			1	No	5000	1200	2450	5000
B. Tariff Metering Room (In Outdoor Switchyard)								
	ENERGY METERING PANEL	EMP	2	No	800	800	2315	1600
C. PR CPP Extension Control Room								
PR SCAP PANEL (FOR 21 No. Bays)		SCAP1, SCAP2,...SCAP21	21	No	400	800	2315	8400
LMS SYSTEM (RTU PANEL)		LMS-RTU-PR	2	No	800	800	2315	1600
	OTHER SAS EQUIPMENTS							
	2 OWS + 1 PRINTERS(A4) + 60inch Video Wall Screen + FURNITURE							
D. PNCP CPP Control Room (Existing Building)								
PNCP SCAP PANEL (FOR 6 No. Bays)		SCAP1, SCAP2,...SCAP6	6	No	400	800	2315	2400
IMB Panel (for Existing PNCP ECS I/f)		IMB1	1	No	800	800	2315	800
LMS SYSTEM (RTU PANEL)		LMS-RTU-PNCP	2	No	800	800	2315	1600
	OTHER SAS EQUIPMENTS							
	2 OWS + 1 PRINTERS(A4) + 60inch Video Wall Screen + FURNITURE							
E. 220kV Mundh S/S (Remote End Panels) (Existing Building)								
1. CONTROL & PROTECTION ROOM								
PLCC MODEM PANEL			1	No	800	800	2312	800
COMUNICATION EQUIPMENTS		DIGITAL PLCC	6	No	700	500	2230	4200
		FODP	1	No	600	600	2200	600
2. LT SWITCHGEAR ROOM								
48V DCDB			1	No	1000	1100	2450	1000
48V BATTERY CHARGER			2	No	700	1000	1900	1400
48V BATTERY BANK			2	No	9000	950	1500	18000

COMMENTS RESOLUTION SHEET for

DRAWING / DOCUMENT TITLE: GIS cum Control Room Building- Conceptual Layout
DOCUMENT NUMBER: TB-411-510-020
REVISION NO: 03

Sl. No.	Drawing Reference Details	REV00			REV01			REV02			REV-03		
		Consultant/ TCE Comment (s)/ Observation(s)	Customer/ IOCL Comment (s)/ Observation(s)	Resolution(s)	Consultant/ TCE Comment (s)/ Observation(s) dtd. 21.04.2020	Customer/ IOCL Comment (s)/ Observation(s) dtd. 24.04.2020	Resolution(s)	Consultant/ TCE Comment (s)/ Observation(s) dtd. 07.05.2020	Customer/ IOCL Comment (s)/ Observation(s) dtd. 07.05.2020	Resolution(s)	Consultant/ TCE Comment (s)/ Observation(s) dtd. 19.06.2020	Customer/ IOCL Comment (s)/ Observation(s) dtd. 19.06.2020	Resolution(s)
A.	CONSULTANT (dtd. 16.03.2020)												
	Electrical												
1	Plan	GIS LCC panel shall be shown as one per bay with dimension of 1000-1200mm as per vendor input.		Noted. Please note that such details are tentative and shall be revised, if required in line with OEM drawings/ design documents.				Ok noted	Ok noted				
2	Plan	Wherever column comes SF6 Duct or Cable Opening shall be rearranged to avoid fouling.		Noted. Please note that such details are tentative. Civil and structure design documents shall be submitted subsequently after approval of this drawing/ document.				Ok noted	Ok noted				
3	Plan	GIS bays shall be placed in between beams and not on beams.		Noted. Please note that such details are tentative. Civil and structure design documents shall be submitted subsequently after approval of this drawing/ document.				Ok noted	Ok noted				
4	Plan	ACDB & DCDB shall be aligned as per as per cable trench route proposed		Noted. Please note that such details are tentative and shall be revised, if required in line with OEM drawings/ design documents.				Ok noted	Ok noted				
5	Plan	No of staircase to be check considering building size as per relevant building standards.		Noted. Please note that such details are tentative. Civil and structure design documents shall be submitted subsequently after approval of this drawing/ document.				Ok noted	Ok noted				
6	Plan	More sections to be provided showing GIS room with EOT crane arrangement, loading platform etc.		Noted. Please note that such details are tentative. Civil and structure design documents shall be submitted subsequently after approval of this drawing/ document.				Ok noted	Ok noted				
7	Plan	No of exit to be check considering building size as per relavant building standards.		Noted and complied.				Ok noted	Ok noted				
8	Plan	All inner dimension of rooms shall be provided. All dimension between panel to panel, panel to wall etc to be shown.		Noted. Please note that such details are tentative. Civil and structure design documents shall be submitted subsequently after approval of this drawing/ document.				Ok noted	Ok noted				
9	Plan	NIFPS panel shall be shown		Noted. Please note that such details are tentative and shall be revised, if required in line with OEM drawings/ design documents.				Ok noted	Ok noted				
10	Plan	TR-3 (trench type) name mentioned in 1st floor GIS room to be removed		Noted and revised.				Ok noted	Ok noted				
11	Plan	Exhaust fan arrangement for Toilet & Pantry to be shown		Noted. Please note that such details are tentative and shall be revised, if required in line with OEM drawings/ design documents.				Ok noted	Ok noted				
12	Section A-A	Cable termination arrangement in SAS/ Control room to be shown. Whether False floor to be provided or else cable entry for panel will be form top.		Noted. Please note that such details are tentative and shall be revised, if required in line with OEM drawings/ design documents.				Ok noted	Ok noted				
13	Plan	In ground floor GIS & LCC panel can be shown dotted as it is placed on 1st floor. Bus duct to be shown in ground floor		Noted. Please note that such details are tentative and shall be revised, if required in line with OEM drawings/ design documents.				Ok noted	Ok noted				
14	Plan	Bay name shall be mention for each GIS module		Noted. Please note that such details are tentative and shall be revised, if required in line with OEM drawings/ design documents.				Ok noted	Ok noted				
15	Plan	No. of CRP panels shown is more compared with 220kV feeders. Panel identification shall be done. CRP panel alignment to be checked.		Noted. Please note that such details are tentative and shall be revised, if required in line with OEM drawings/ design documents.				Ok noted	Ok noted				
16	Plan	Eye wash to be provided in battery room		Noted. Please note that such details are tentative. Civil and structure design documents shall be submitted subsequently after approval of this drawing/ document.	Requirement is for Eye wash.		Noted.	Ok noted	Ok noted				
17	Plan	UPS not shown in drawing		Noted. Please note that such details are tentative and shall be revised, if required in line with OEM drawings/ design documents.				Ok noted	Ok noted				
18	Plan	TR-2 cable trench (3Mtr wide) shown for battery room cables is too large for cables coming from battery room to DC system.		Noted and Revised.				Ok noted	Ok noted				
19	Plan	Door to be provided in 1st floor staircase for entering into loading/unloading platform		In first floor, staircase shall not be covered and it shall be open. Civil and structure design documents shall be submitted subsequently after approval of this drawing/ document.				Ok noted	Ok noted				
20	General	Room with false celing & false floor shall be shown in section drawing		Noted. Please note that such details are tentative. Civil and structure design documents shall be submitted subsequently after approval of this drawing/ document.				Ok noted	Ok noted				
21	Plan	Steps & door shall be shown at ground floor stair case entry point		In ground floor, staircase shall not be covered and it shall be open. Civil and structure design documents shall be submitted subsequently after approval of this drawing/ document.				Ok noted	Ok noted				
22	GIS room	GIS room height shown as 11mtrs in 220/33kV layout Plan & Section. Kindly confirm		Noted and revised.				Ok noted	Ok noted				

COMMENTS RESOLUTION SHEET for

DRAWING / DOCUMENT TITLE: GIS cum Control Room Building- Conceptual Layout
DOCUMENT NUMBER: TB-411-510-020
REVISION NO: 03

Sl. No.	Drawing Reference Details	REV00			REV01			REV02			REV-03		
		Consultant/ TCE Comment (s)/ Observation(s)	Customer/ IOCL Comment (s)/ Observation(s)	Resolution(s)	Consultant/ TCE Comment (s)/ Observation(s) dtd. 21.04.2020	Customer/ IOCL Comment (s)/ Observation(s) dtd. 24.04.2020	Resolution(s)	Consultant/ TCE Comment (s)/ Observation(s) dtd. 07.05.2020	Customer/ IOCL Comment (s)/ Observation(s) dtd. 07.05.2020	Resolution(s)	Consultant/ TCE Comment (s)/ Observation(s) dtd. 19.06.2020	Customer/ IOCL Comment (s)/ Observation(s) dtd. 19.06.2020	Resolution(s)
23	Plan	Bus duct for transformer bay can be optimise by routing it from cable cellar. ACDB & DCDB room can be optimised in size to avoid fouling with bus duct.		This is finalized and frozen in line with Customer requirement and consent.				Ok noted	Ok noted				
24	Plan	Additional door (near SAS room) to be shown for entry in GIS room		Noted and revised.	Not shown in drg.		Noted and complied.	Ok noted	Ok noted				
25	Plan	Roof layout indicating busduct shall be provided		Please note that these details are tentative and indicated and shall be revised based on OEM drawings, which shall be submitted separately and such requirements shall be taken care during that.				Ok noted	Ok noted				
26	Section A-A	Raised floor / power cable entry, HVAC cable entry to be shown.		Please note that these details are tentative and indicated and shall be revised based on OEM drawings, which shall be submitted separately and such requirements shall be taken care during that.				Ok noted	Ok noted				
27		EHV cable trench is passing below the HVAC room. Kindly reroute the EHV cable to avoid fouling.		In ground floor, staircase shall not be covered and it shall be open. Civil/ Mechanical drawing shall be submitted subsequently after approval of this drawing/ document.				Ok noted	Ok noted				
28		Service shaft / fire hose shall be shown in drawing		In ground floor, staircase shall not be covered and it shall be open. Civil/ Mechanical drawing shall be submitted subsequently after approval of this drawing/ document.				Ok noted	Ok noted				
	Civil & General												
29	General	Layout can be optimised		Noted.				Ok noted	Ok noted				
30	Section A-A	Floor level to be shown		Noted and revised.				Ok noted	Ok noted				
31	Plan	Columns shall be placed at equidistant. Kindly check no. of column shown in drawings.		In ground floor, staircase shall not be covered and it shall be open. Civil/ Mechanical drawing shall be submitted subsequently after approval of this drawing/ document.		The reply of BHEL is not relevant	column/ beam details are not the part of electrical scope and it shall be part loading details and shall be provided in civil design/ drawing, which shall be submitted separately and subsequently.	Ok noted	Ok noted				
32		GIS room clear span is 14.0 m, which may be critical during design / execution.		In ground floor, staircase shall not be covered and it shall be open. Civil/ Mechanical drawing shall be submitted subsequently after approval of this drawing/ document.		The reply of BHEL is not relevant	Such detailing shall be taken care in civil design/ drawing, which shall be submitted separately and subsequently.	Ok noted	Ok noted				
33		Store Room of GIS building to have access from outside with ramp & rolling shutter		Revised details are provided.				Ok noted	Ok noted				
34		Kindly review reroute busduct from cable cellar to GIS room to avoid cutout in ground floor slab. Also please review route of GIB to transformer if it can be optimised.		Please note that these details are tentative and indicated and shall be revised based on OEM drawings, which shall be submitted separately and such requirements shall be taken care during that.		The design shall be in line the original tender requirements only. The design of bus-dcut to be preapred accordingly and in consultation with OEM only.	Noted.	Ok noted	Ok noted				
35		Periphery road size to be increase for transportation of GIS & other equipment. 4mtr road will not be sufficient.		This is finalized and frozen in line with Customer requirement and consent.	Pls recheck	Kindly recheck the road dimension requirements for movement of equipments as per TCE comments. However dimensions of building shall not be reduced and shall remain fixed in line with original tender requirements.	As per present prevailing conditions, it can not be increased as other side of the building has also been provided road for easy access for transformer yard and HVAC room. Possibilty, if any may please be advised.	Ok noted	Ok noted				
36	Section A-A	Parapet wall to be shown on roof of building		In ground floor, staircase shall not be covered and it shall be open. Civil/ Mechanical drawing shall be submitted subsequently after approval of this drawing/ document.		The reply of BHEL is not relevant		BHEL to reply	BHEL to reply	It may please be noted that in ground floor, staircase area shall be open for easy aces for first floor area for contigency conditions. Same is discussed and shared the relevant pictures for IOCL, Panipat also.	Reply is not in line with query however BHEL to confirm compliance in detail engineering of building based on OEM and Civil design of Building.	Please reply in line with TCE comments	Noted. Parapet wall shall be provided on the roof of building as per standard civil design.
37	Section A-A	Staircase to be shown till the top of GIS building		In ground floor, staircase shall not be covered and it shall be open. Civil/ Mechanical drawing shall be submitted subsequently after approval of this drawing/ document.		The reply of BHEL is not relevant		BHEL to reply	BHEL to reply	It may please be noted that in ground floor, staircase area shall be open for easy aces for first floor area for contigency conditions. Same is discussed and shared the relevant pictures for IOCL, Panipat also.	Reply is not in line with query however BHEL to confirm compliance in detail engineering of building based on OEM and Civil design of Building.	Please reply in line with TCE comments	Noted. Ladder arrangement shall be provided.
38		Door for 220kV GIS room shall be shifted towards west side to avoid fouling with future bays LCC panels		In ground floor, staircase shall not be covered and it shall be open. Civil/ Mechanical drawing shall be submitted subsequently after approval of this drawing/ document.		The reply of BHEL is not relevant		BHEL to reply	BHEL to reply	It may please be noted that in ground floor, staircase area shall be open for easy aces for first floor area for contigency conditions. Same is discussed and shared the relevant pictures for IOCL, Panipat also.	Reply is not in line with query however BHEL to confirm compliance in detail engineering of building based on OEM and Civil design of Building.	Please reply in line with TCE comments	Noted. Door, Window and Ventilators shall be as stnadrds civil design procatices.
39	Plan	Wall not to be shown in 1st floor (West side) for loading/unloading platform		In ground floor, staircase shall not be covered and it shall be open. Civil/ Mechanical drawing shall be submitted subsequently after approval of this drawing/ document.		The reply of BHEL is not relevant		BHEL to reply	BHEL to reply	It may please be noted that in ground floor, staircase area shall be open for easy aces for first floor area for contigency conditions. Same is discussed and shared the relevant pictures for IOCL, Panipat also.	Reply is not in line with query however BHEL to confirm compliance in detail engineering of building based on OEM and Civil design of Building.	Please reply in line with TCE comments	Noted. Removable ghand railing shall be provided for loading/ unloadng platform.
40		All door opening shall be outside the room		In ground floor, staircase shall not be covered and it shall be open. Civil/ Mechanical drawing shall be submitted subsequently after approval of this drawing/ document.	Many replies are not as per comments given, pls check and send revised/modified reply	The reply of BHEL is not relevant	This requirement is not clear. Please note that opening of door in corridor shall obstruct the movement. Exit door shall, though have opening outside. Requirement, if any, amy please be advised.	Ok noted	Ok noted				
41	Section A-A	Beam to be shown in all rooms to verify the height of room for erection of panel & false ceiling etc.		In ground floor, staircase shall not be covered and it shall be open. Civil/ Mechanical drawing shall be submitted subsequently after approval of this drawing/ document.		The reply of BHEL is not relevant	Beam details are not the part of electrical scope and it shall be part loading details and shall be provided in civil design/ drawing.	Ok noted	Ok noted				
42	Plan	Dimensions of building to be shown Centre to centre. Inner room dimension to be provided in civil drawing		Please note that the dimesnion shown are clear electrical dimensions, which shall be taken care in civil drawings, which shall be submitted separately.				Ok noted	Ok noted				
43	Ground Plan				Entry/Exit to lobby of Cable cellar to be provided		Please note that Lobby/ Staircase area is not envisaged as closed area. It shall be open area for free access to all floor area to be contigency conditions.	Ok noted	Ok noted				

COMMENTS RESOLUTION SHEET for

DRAWING / DOCUMENT TITLE: GIS cum Control Room Building- Conceptual Layout
DOCUMENT NUMBER: TB-411-510-020
REVISION NO: 03

Sl. No.	Drawing Reference Details	REV00			REV01			REV02			REV-03		
		Consultant/ TCE Comment (s)/ Observation(s)	Customer/ IOCL Comment (s)/ Observation(s)	Resolution(s)	Consultant/ TCE Comment (s)/ Observation(s) dtd. 21.04.2020	Customer/ IOCL Comment (s)/ Observation(s) dtd. 24.04.2020	Resolution(s)	Consultant/ TCE Comment (s)/ Observation(s) dtd. 07.05.2020	Customer/ IOCL Comment (s)/ Observation(s) dtd. 07.05.2020	Resolution(s)	Consultant/ TCE Comment (s)/ Observation(s) dtd. 19.06.2020	Customer/ IOCL Comment (s)/ Observation(s) dtd. 19.06.2020	Resolution(s)
44	Ground Plan				GIS to be removed from Ground floor or can be shown in light		GIS part are superimposed on ground floor for clarity regarding fouling, if any.	Ok noted	Ok noted				
45	Ground Plan				Provide door on this wall also for SF6 cylinders room.		Multiple emtries are not adviasble for SF6/ CO2 Cylinder room.	Ok noted	Ok noted				
46	Ground Plan				Fire Doors as per safety requirement to be provided for all rooms. Should open outside. To be finalised by Architect		Fire doors as per safety requirement shall be provided in line with guidelines.	Ok noted	Ok noted				
47	Ground Plan				Cellar room-Show Exit outside.		Noted.	Ok noted	Ok noted				
48	First Floor				Provide exit/Entry door.		Please note that Staircase to loading/ unloading area is not envisaged as closed area. It shall be open area for free access to all floor area to be contigency conditions.	Ok noted	Ok noted				
49	First Floor				Exit not shown here in GIS Room.		Noted and complied.	Ok noted	Ok noted				
50	First Floor				Staircase will be required for exiting first floor.		Laddet type arrangement is envisaged.	Ok noted	Ok noted				
51	First Floor				Check feasibility of this exit to switchyard area from first floor.		Necessary clerance for GID shall be maintained. Other passibilty, if any is to be advised.	Ok noted	Ok noted				
52	Section C-C				Show Crane maintenance platform and Hook height.		Such detailed shall be updated in line with firm input based on OEM drawing and GIS OEM recommendations.	Ok noted	Ok noted				
53	Section C-C				Busduct should start from other side of GIS. Rotate GIS in Section		It is to inform you that such representations are only typical details and firm and exact input shall be provided and updated after OEM drawings, which shall be submitted separately.	Ok noted	Ok noted				
54	Section C-C				Bus duct support should not hinder movement of gascart all around GIS		It is to inform you that such representations are only typical details and firm and exact input shall be provided and updated after OEM drawings, which shall be submitted separately. Further it may please be noted that Gas equipment should be provided free access from one side not all around.	Ok noted	Ok noted				
55	Section C-C				Comment same as given in Switchyard layout on FGL etc		Noted and complied.	Ok noted	Ok noted				
56	Section A-A				Satircase block should have opening/access to roof florr.		Such detaills shall be provided and incorporated in architectural and civil drawings, which shall be submitted separately.	Ok noted	Ok noted				
57	Section A-A				Requirement of false ceiling and false flooring to be taken care during further detailing		Such details shall be provided in AC & Ventilation drawings, which shall be submitted separately.	Ok noted	Ok noted				
58	PR Extension Room, Sheet-2				1) Room to be provided with proper access. Entry/Exit etc 2) Room Height should match with existing control room.		Noted and complied.	Ok noted	Ok noted				
59	General				No of panels can be determined based on experience of past project also.		These details are under preparation and exact details for the requirement shall be intimated and shall be made the part of the drawing.	Ok noted	Ok noted				
60	General				Some replies are not in line with comments given.		It may please be noted that the basis purpose of this drawing is locating equipmet and layouting of the rrom with electrical clearances. General requirements such as door, window, ventilators and paraphet etc. shall be covered in architectural and civil drawing, which shall be submitted separately and subsequently.	Ok noted	Ok noted				
B	CUSTOMER (dtd. 14.02.2020)												
1			The dimension of rack room shall be designed to ensure availability of spare space for additional 30% panel for future extensions.	Noted.					Noted				
2			The inter-panel distances and distances between panel to building to be shown in the layout plan.	Please note that these details are tentative and indicated and shall be revised based on OEM drawings, which shall be submitted separately and such requirements shall be taken care during that.					Noted				
3			The location of the SAS/Control room shall be nearby the operator's room only for ease of operation activity	Noted.					Noted				
4			Battery room in the ground floor shall have entrance from outside.	Noted and revised.					Noted				
5			The location of the UPS, Battery chargers, UPS ACDB, DCDB, MLDB, ELDBs, PMCC shall be on the first floor of the building.	Noted and revised.					Noted				
6			Lighting transformers can be kept in ground floor. VAM AC system MCC to be kept in HVAC room.	Noted and revised.					Noted				

COMMENTS RESOLUTION SHEET for

DRAWING / DOCUMENT TITLE: GIS cum Control Room Building- Conceptual Layout
DOCUMENT NUMBER: TB-411-510-020
REVISION NO: 03

Sl. No.	Drawing Reference Details	REV00			REV01			REV02			REV-03		
		Consultant/ TCE Comment (s)/ Observation(s)	Customer/ IOCL Comment (s)/ Observation(s)	Resolution(s)	Consultant/ TCE Comment (s)/ Observation(s) dtd. 21.04.2020	Customer/ IOCL Comment (s)/ Observation(s) dtd. 24.04.2020	Resolution(s)	Consultant/ TCE Comment (s)/ Observation(s) dtd. 07.05.2020	Customer/ IOCL Comment (s)/ Observation(s) dtd. 07.05.2020	Resolution(s)	Consultant/ TCE Comment (s)/ Observation(s) dtd. 19.06.2020	Customer/ IOCL Comment (s)/ Observation(s) dtd. 19.06.2020	Resolution(s)
7			Location of AHU room shall also be shown in VAM.	Noted.					Noted				
8			The space toilet and pantry to be reduced and same may be added into operator's for optimization.	Noted and revised.					Noted				
9			The size of store room is observed to be small. Therefore size may be increased or different stores room may be provided of equivalent area.	Noted and revised.					Noted				
10			Minimum two or more (as per CEA requirements) exit from the sub-station shall be provided at opposite ends.	Noted and revised.					Noted				
11			Room/ plot plan for the MVWS may also be shown in the drawing	Please note that these details are tentative and indicated and shall be revised based on OEM drawings, which shall be submitted separately and such requirements shall be taken care during that.					Noted				
12						The FFL level for the switchyard shall match with the FFL level of SS-28 only in line with the technical corrigendum-1 point: 72.	Noted and complied.		The FFL indicated in the drawing does not match with the FFL indicated in the General electrical layour approved under code-2. Either remove the FFL or revise the same to match with the FFL of the approved GELO drawing. The final code approval shall only be provided after revision of the same.	Please refer approved Layout drawing, wherein FFL is same as mentioned heerwith.	FGL/FFL need to be finalised as per IOCL requirement for detail design	The FGL and FFL shall be in line with approved GELO only. BHEL to confirm.	Noted.
13						The height of the PR control room extension is shown as 5500 (max). The height of the control room extension shall be matched with the existing control room height only. If the height of the control room is found to be more than	Noted and complied.		Ok Noted.				
													This drawing is submitted for relocation of AHU Room with its requiste platform for CFU. In addition to this, tentative Panel Cutouts have been provided for design input for Hanger, rack assembly and internal trench layout.

NOTE:
CONTRACTOR IS OBLIGED TO FURNISH THIS SHEET (DULY FILLED UP WITHRESOLUTION TO ALL CUSTOMER/ CONSULTANT COMMENTS ALONGWITH REVISED DRAWINGS

FIRST ANGLE PROJECTION (ALL DIMENSIONS ARE IN mm)

THE INFORMATION ON THIS DOCUMENT IS THE PROPERTY OF BHARAT HEAVY ELECTRICALS LIMITED. IT MUST NOT BE USED DIRECTLY OR INDIRECTLY IN ANY WAY DETRIMENTAL TO THE INTEREST OF THE COMPANY

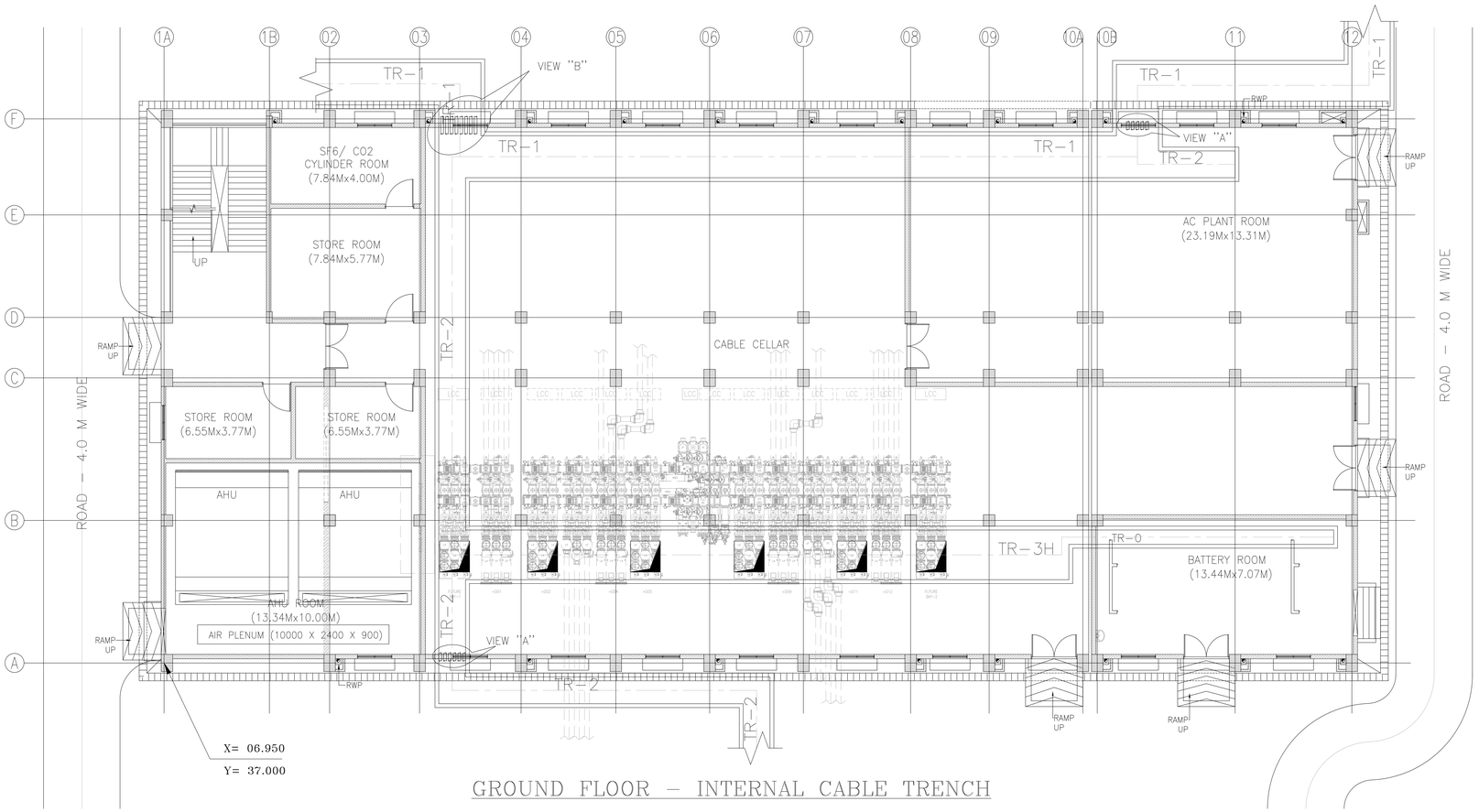

GROUND FLOOR – INTERNAL CABLE TRENCH

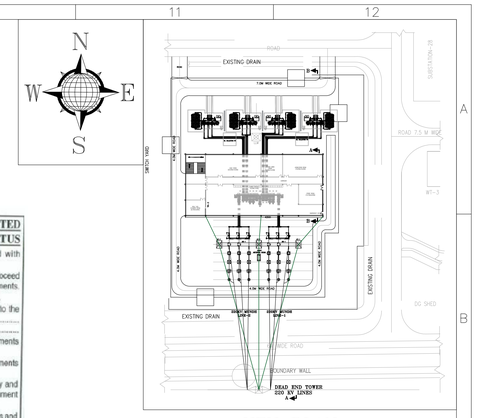

KEY PLAN

TATA CONSULTING ENGINEERS LIMITED
VENDOR DOCUMENT REVIEW STATUS

- ☑ A. Document approved as submitted; proceed with fabrication/construction.
- ☐ B. Document approved subject to comments noted; proceed with fabrication/construction considering our comments.
- ☐ C. Our comments are noted on this marked up print.
- ☐ D. Our comments are noted in the memo attached to the forwarding transmittal Letter No. ..... Dated .....
- ☐ E. Correct original of this document to reflect our comments and resubmit for approval.
- ☐ F. Correct original of this document to reflect our comments and resubmitted for records.
- ☐ G. Document of this category are for information only and not for approval. Information furnished on the document is noted.
- ☐ H. Document reviewed against our previous comments and other revisions highlighted and identified by the vendor.
- ☐ I. Document returned without review.

Approval conveyed herein neither relieves Vendor/Contractor of his contractual obligations and his responsibilities for correctness of dimensions, materials of construction, weights, quantities, design details, assembly fits, system/performance requirements and conformity of supplies with Indian Statutory Laws as may be applicable, nor does it limit the Purchaser's rights under the contract.

Reviewed by SN/AKN Date 04-03-2021

NOTES:–

1. ALL DIMENSIONS ARE IN mm.
2. THE LOCATION OF TRENCHES/ HANGER & RACK ASSEMBLY MARKED IN THIS DRAWING MAY BE MODIFIED TO SUIT SITE CONDITIONS.
3. INSERTS MUST BE EMBEDDED FOR FIXING HANGER & RACK ASSEMBLY.
4. POWER CABLES SHALL BE LAID IN TOP TIERS AND CONTROL CABLES IN BOTTOM TIERS, AS PER TECHNICAL SPECIFICATION.
5. EARTH CONDUCTOR 50x6 GI FLAT SHALL BE RUN ALONG THE TOP TIER AND TO BE WELDED ON THE CABLE SUPPORT BEFORE INSTALLATION OF CABLES.
6. ALL OTHER DETAILS PERTAINING TO CIVIL WORKS SHALL REFLECT IN RESPECTIVE CIVIL DRAWINGS.
7. ENTRY/ EXIT OF CABLES SHALL BE THROUGH THE PIPE SLEEVES FOR TRENCH CONNECTING WITH BUILDING. FIRE SEALANTS SHALL BE PROVIDED AT THIS LOCATIONS.
8. CABLE TRAY IS SIZED CONSIDERING SINGLE LAYER OF CABLES FOR LT POWER CABLES, WHEREAS FOR CONTROL OR INSTRUMENTATION CABLES, MAXIMUM DOUBLE LAYER PER TRAY IS CONSIDERED.
9. SEPARATE CABLE TRAYS SHALL BE USED FOR LT POWER CABLE, LT CONTROL CABLE & INSTRUMENTATION CABLES/COMMUNICATION CABLE.
10. SUPPORT SPAN IS TO BE PROVIDED AT A DISTANCE OF 1500MM. INSERT PLATE SHALL SUITABLE FOR 3 TIER RACK ASSEMBLY BE PROVIDED IN TR–3H ALSO FOR FUTURE USE OF RACK ASSEMBLY.
11. CABLE TRAYS, RACKS AND TRENCHES IS SIZED TO ALLOW FOR 30% FUTURE CABLES
12. CABLE TRENCH SHOWN FOR FUTURE PANEL SHALL BE COVERED WITH CHEQUERED PLATE.
13. TRENCH SECTION–3H IN AHU ROOM SHALL BE IN BOX CULVERT FORM TO SUITABLE FOR SUSTAINING THE DYNAMIC LOADING OF AHU.

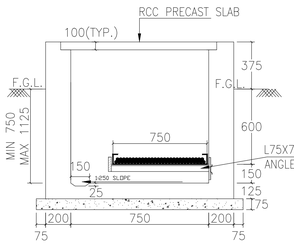

TR–0
(TYPICAL DETAILS)

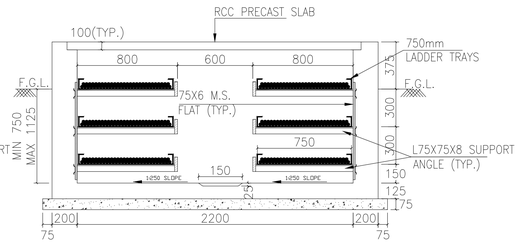

TR–1
(TYPICAL DETAILS)

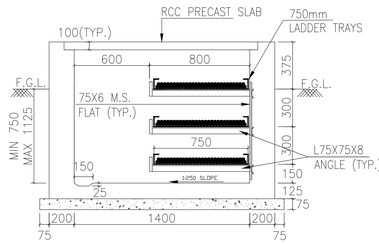

TR–2
(TYPICAL DETAILS)

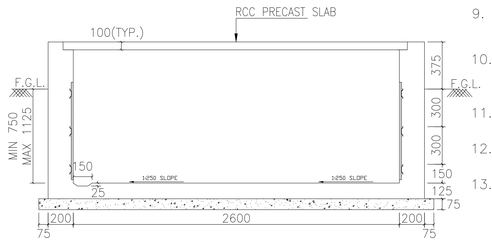

TR–3H
(TYPICAL DETAILS)

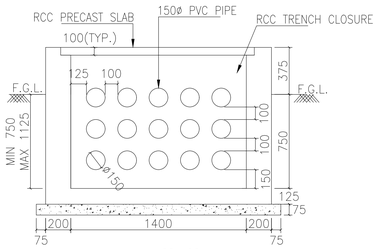

VIEW "A"
(TYPICAL DETAILS)

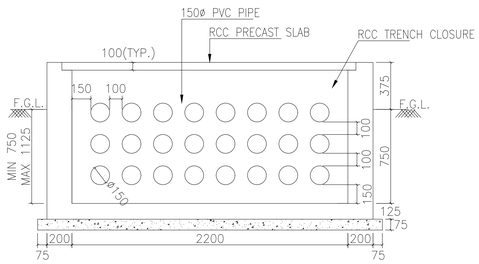

VIEW "B"
(TYPICAL DETAILS)

REFERENCE DRAWING (S)/ DOCUMENT(S) –

SL. NO.	DRAWING/ DOCUMENT NO.	DRAWING TITLE
1.	TB–411–316–020	GIS CUM CONTROL ROOM BUILDING– CONCEPTUAL LAYOUT

PROJECT: LSTK JOB FOR ISBL WORK OF 220kV GRID POWER IMPORT AT PANIPAT REFINERY
LOA NO. RPRC182491/26286965 DTD.24.01.2020

OWNER: INDIAN OIL CORPORATION LIMITED

CONSULTANT: TATA CONSULTING ENGINEERS LIMITED

भारत हेवी इलेक्ट्रिकल्स लिमिटेड
ट्रांसमिशन परियोजना विभाग
BHARAT HEAVY ELECTRICALS LTD.
TRANSMISSION PROJECTS DIVISION

	NAME	SIGN.	DATE
DRN.	PK		30.07.2020
CHD.	DKS		30.07.2020
APPD.	VK		30.07.2020

REV.	DATE	ALTERED / CHECKED / APPROVED	ZONE
05	03.03.21	ALTERED PK; CHECKED DKS; APPROVED VK	AS PER CONSULATNT/TCE AND CUSTOMER/IOCL COMMENTS DTD. 17.02.2021 & 23.02.2021 RESPECTIVELY.
04	10.02.21	ALTERED PK; CHECKED DKS; APPROVED VK	STRUCTURE DETAILS CHANGED AS PER ACTUAL LOADING REQUIREMENTS.
03	08.01.21	ALTERED PK; CHECKED DKS; APPROVED VK	AS PER CONSULATNT/TCE AND CUSTOMER/IOCL COMMENTS DTD. 12.10.2020 & 15.10.2020 RESPECTIVELY.
02	09.10.20	ALTERED PK; CHECKED DKS; APPROVED VK	AS PER CONSULATNT/TCE AND CUSTOMER/IOCL COMMENTS DTD. 07.09.2020 & 10.09.2020 RESPECTIVELY.
01	05.09.20	ALTERED PK; CHECKED DKS; APPROVED VK	AS PER CONSULATNT/TCE AND CUSTOMER/IOCL COMMENTS DTD. 05.08.2020 & 05.08.2020 RESPECTIVELY.

DEPT. TBEM CODE. 411 | UNTOL. DIMS. GR. ~~C/M/F~~ | SCALE –N.A.– | WEIGHT (KG) –N.A.– | REF. TO ASSY. DRG. –N.A.– | ITEM NO. –N.A.– | NO.OF ITEMS –N.A.–

TITLE: GIS CUM CONTROL ROOM BUILDING– PANEL WITH INDOOR CABLE TRENCH/ HANGER RACK ASSEMBLY LAYOUT

DRAWING/ DOCUMENT NO. TB–411–316–021 | REV. 05

SHT. No 01 | NO. OF SHT. 03

SIZE–A1

COMPUTER FILE NAME | REF. DRG. NO. | SIGN. AND DATE | INVENTORY NO

FIRST ANGLE PROJECTION (ALL DIMENSIONS ARE IN mm)

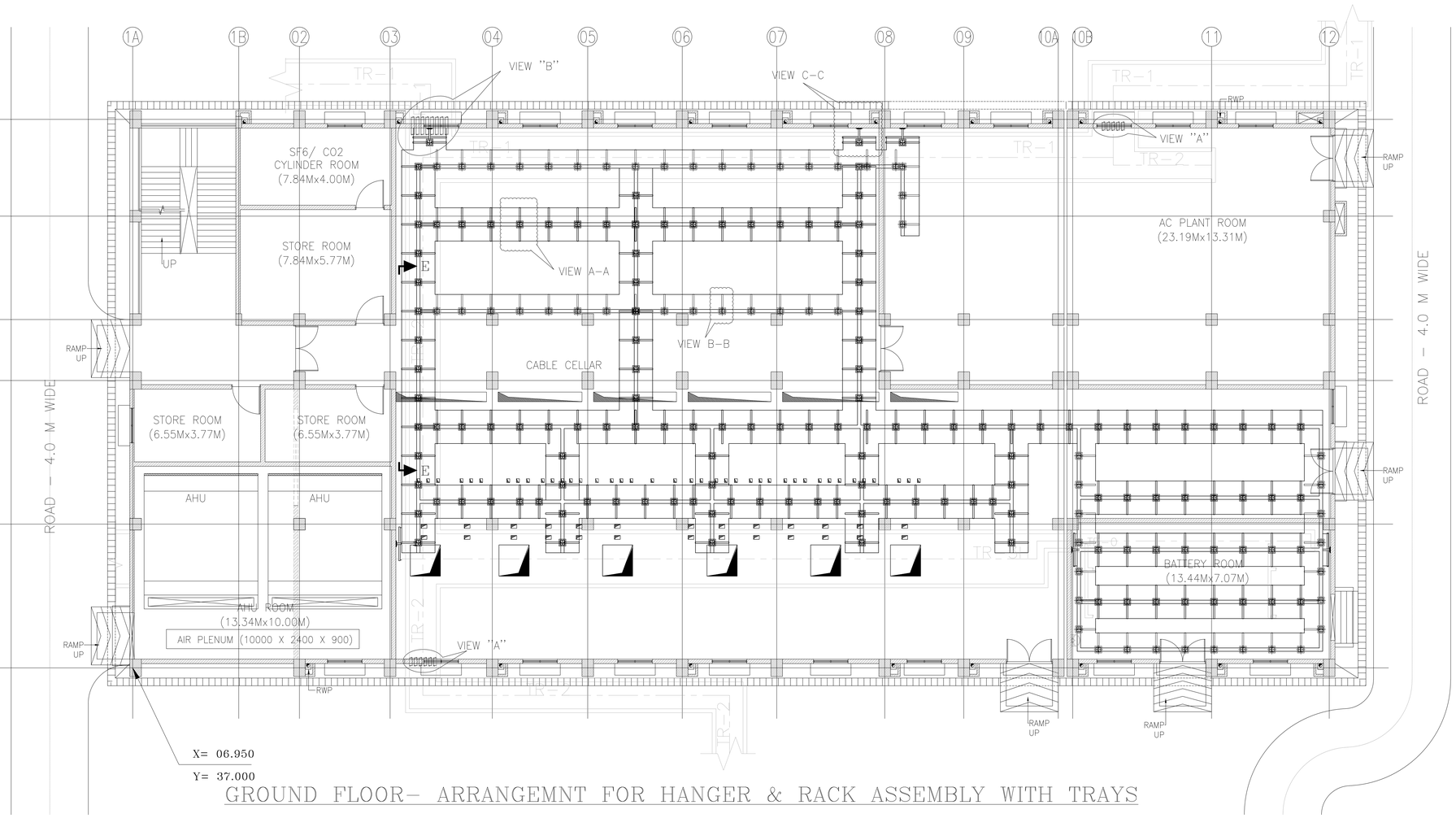

GROUND FLOOR- ARRANGEMNT FOR HANGER & RACK ASSEMBLY WITH TRAYS

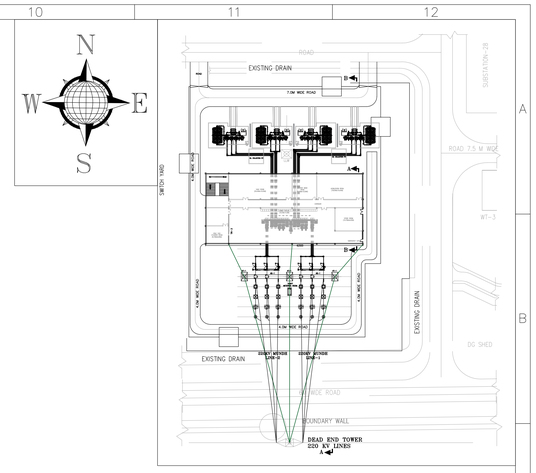

KEY PLAN

LEGEND:-

- SECONDARY CABLE TRENCH FOR INTERFACING CABLE BET GIS AND LCC WIDTH : 200x150mm
- SECONDARY CABLE TRENCH FOR INTERFACING CABLE LCC AND CONTROL ROOM, WIDTH:300x200mm
- CUTOUT FOR POWER CABLES BELOW CABLE END SIZE: 1560 × 1621 MM

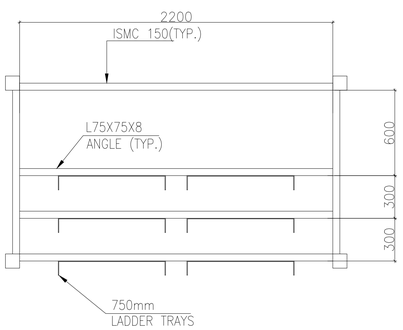

VIEW D-D
CABLE PULL PIT
(TYPICAL DETAILS)

REFERENCE DRAWING (S)/ DOCUMENT(S) -

SL. NO.	DRAWING/ DOCUMENT NO.	DRAWING TITLE
1.	TB-411-316-020	GIS CUM CONTROL ROOM BUILDING- CONCEPTUAL LAYOUT

PROJECT: LSTK JOB FOR ISBL WORK OF 220kV GRID POWER IMPORT AT PANIPAT REFINERY
LOA NO. RPRC182491/26286965 DTD.24.01.2020

OWNER: INDIAN OIL CORPORATION LIMITED

CONSULTANT: TATA CONSULTING ENGINEERS LIMITED

भारत हेवी इलेक्ट्रिकल्स लिमिटेड
ट्रांसमिशन परियोजना विभाग
BHARAT HEAVY ELECTRICALS LTD.
TRANSMISSION PROJECTS DIVISION

	NAME	SIGN.	DATE
DRN.	PK		30.07.2020
CHD.	DKS		30.07.2020
APPD.	VK		30.07.2020

REV.	DATE	ALTERED / CHECKED / APPROVED	ZONE
05	03.03.21	PK / DKS / VK	AS PER CONSULATNT/TCE AND CUSTOMER/IOCL COMMENTS DTD. 17.02.2021 & 23.02.2021 RESPECTIVELY.
04	10.02.21	PK / DKS / VK	STRUCTURE DETAILS CHANGED AS PER ACTUAL LOADING REQUIREMENTS.
03	08.01.21	PK / DKS / VK	AS PER CONSULATNT/TCE AND CUSTOMER/IOCL COMMENTS DTD. 12.10.2020 & 15.10.2020 RESPECTIVELY.
02	09.10.20	PK / DKS / VK	AS PER CONSULATNT/TCE AND CUSTOMER/IOCL COMMENTS DTD. 07.09.2020 & 10.09.2020 RESPECTIVELY.
01	05.09.20	PK / DKS / VK	AS PER CONSULATNT/TCE AND CUSTOMER/IOCL COMMENTS DTD. 05.08.2020 & 05.08.2020 RESPECTIVELY.

DEPT. TBEM CODE. 411 | UNTOL. DIMS. GR. ~~C/M/F~~ | SCALE -N.A.- | WEIGHT (KG) -N.A.- | REF. TO ASSY. DRG. -N.A.- | ITEM NO. -N.A.- | NO.OF ITEMS -N.A.-

TITLE: GIS CUM CONTROL ROOM BUILDING- PANEL WITH INDOOR CABLE TRENCH/ HANGER RACK ASSEMBLY LAYOUT

DRAWING/ DOCUMENT NO. TB-411-316-021 | REV. 05 | SHT. No 02 | NO. OF SHT. 03

SIZE-A1

THE INFORMATION ON THIS DOCUMENT IS THE PROPERTY OF BHARAT HEAVY ELECTRICALS LIMITED. IT MUST NOT BE USED DIRECTLY OR INDIRECTLY IN ANY WAY DETRIMENTAL TO THE INTEREST OF THE COMPANY

COMPUTER FILE NAME | REF. DRG. NO. | SIGN. AND DATE | INVENTORY NO

FIRST ANGLE PROJECTION (ALL DIMENSIONS ARE IN mm)

THE INFORMATION ON THIS DOCUMENT IS THE PROPERTY OF BHARAT HEAVY ELECTRICALS LIMITED. IT MUST NOT BE USED DIRECTLY OR INDIRECTLY IN ANY WAY DETRIMENTAL TO THE INTEREST OF THE COMPANY

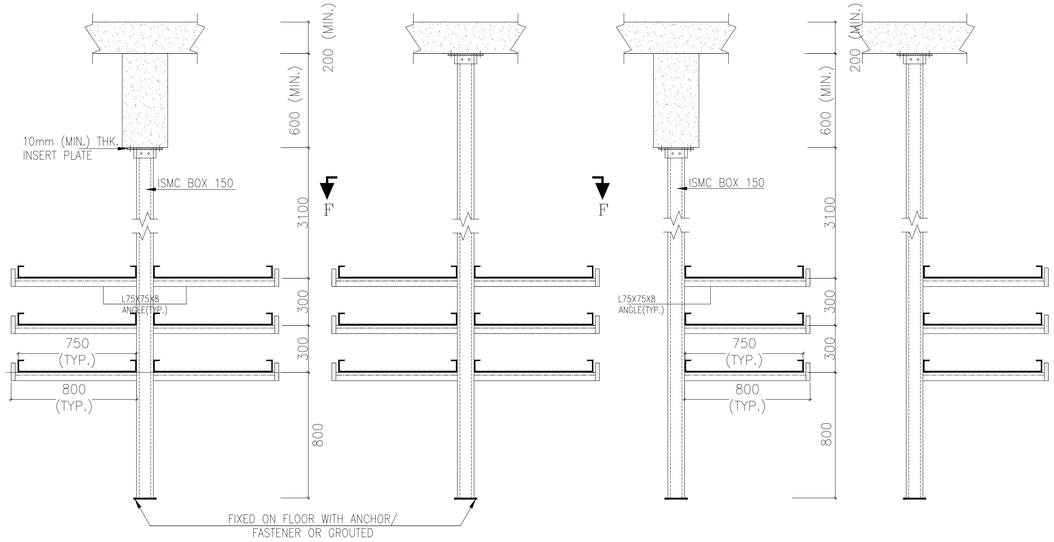

VIEW A–A
(TYPICAL DETAILS)

VIEW B–B
(TYPICAL DETAILS)

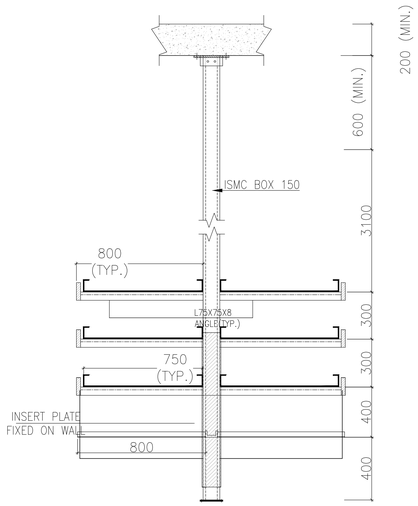

VIEW C–C
(TYPICAL DETAILS)

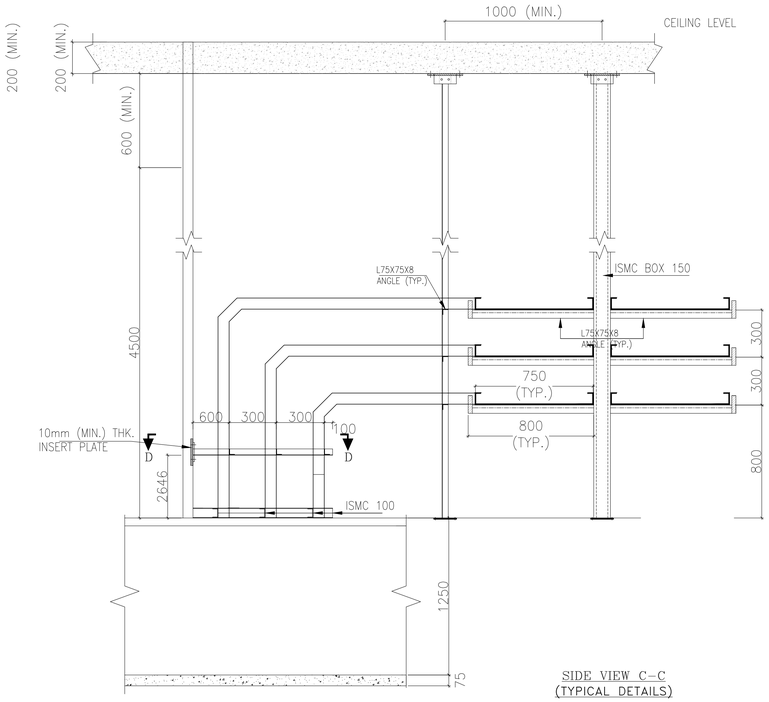

SIDE VIEW C–C
(TYPICAL DETAILS)

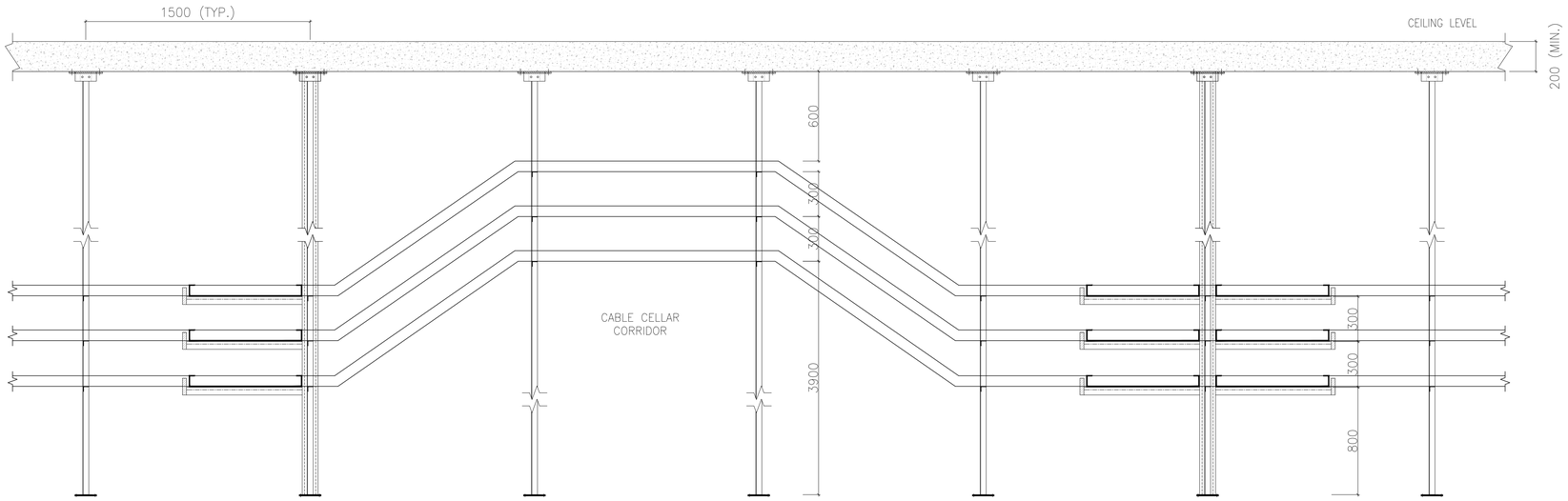

VIEW E–E

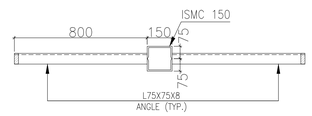

VIEW F–F
(ISMC BOX 150)

REFERENCE DRAWING (S)/ DOCUMENT(S) –

SL. NO.	DRAWING/ DOCUMENT NO.	DRAWING TITLE
1.	TB-411-316-020	GIS CUM CONTROL ROOM BUILDING- CONCEPTUAL LAYOUT

PROJECT: LSTK JOB FOR ISBL WORK OF 220kV GRID POWER IMPORT AT PANIPAT REFINERY
LOA NO. RPRC182491/26286965 DTD.24.01.2020

OWNER: INDIAN OIL CORPORATION LIMITED

CONSULTANT: TATA CONSULTING ENGINEERS LIMITED

भारत हेवी इलेक्ट्रिकल्स लिमिटेड
ट्रांसमिशन परियोजना विभाग
BHARAT HEAVY ELECTRICALS LTD.
TRANSMISSION PROJECTS DIVISION

	NAME	SIGN.	DATE
DRN.	PK		30.07.2020
CHD.	DKS		30.07.2020
APPD.	VK		30.07.2020

REV.	DATE	ALTERED / CHECKED / APPROVED	REV.	DATE	ALTERED / CHECKED / APPROVED	REV.	DATE	ALTERED / CHECKED / APPROVED	REV.	DATE	ALTERED / CHECKED / APPROVED	REV.	DATE	ALTERED / CHECKED / APPROVED	REV.	DATE	ALTERED / CHECKED / APPROVED	REV.	DATE	ALTERED / CHECKED / APPROVED
						05	03.03.21	PK / DKS / VK	04	10.02.21	PK / DKS / VK	03	08.01.21	PK / DKS / VK	02	09.10.20	PK / DKS / VK	01	05.09.20	PK / DKS / VK
ZONE			ZONE			ZONE	AS PER CONSULATNT/TCE AND CUSTOMER/IOCL COMMENTS DTD. 17.02.2021 & 23.02.2021 RESPECTIVELY.		ZONE	STRUCTURE DETAILS CHANGED AS PER ACTUAL LOADING REQUIREMENTS.		ZONE	AS PER CONSULATNT/TCE AND CUSTOMER/IOCL COMMENTS DTD. 12.10.2020 & 15.10.2020 RESPECTIVELY.		ZONE	AS PER CONSULATNT/TCE AND CUSTOMER/IOCL COMMENTS DTD. 07.09.2020 & 10.09.2020 RESPECTIVELY.		ZONE	AS PER CONSULATNT/TCE AND CUSTOMER/IOCL COMMENTS DTD. 05.08.2020 & 05.08.2020 RESPECTIVELY.		

DEPT. TBEM CODE. 411	UNTOL. DIMS. GR. ~~C/M/F~~	SCALE –N.A.–	WEIGHT (KG) –N.A.–	REF. TO ASSY. DRG. –N.A.–	ITEM NO. –N.A.–	NO.OF ITEMS –N.A.–

TITLE: GIS CUM CONTROL ROOM BUILDING– PANEL WITH INDOOR CABLE TRENCH/ HANGER RACK ASSEMBLY LAYOUT

DRAWING/ DOCUMENT NO. TB-411-316-021 REV. 05

SHT. No 03 NO. OF SHT. 03

COMPUTER FILE NAME | REF. DRG. NO. | SIGN. AND DATE | INVENTORY NO

SIZE–A1

COMMENTS RESOLUTION SHEET for
DRAWING / DOCUMENT TITLE: GIS cum Control Room Building- Panel with Indoor Cable Trench/ Hanger Rack Assembly Layout
DOCUMENT NUMBER: TB-411-510-021
REVISION NO: 02

Sl. No.	Drawing Reference Details	REV00			REV01			REV02			REV03			REV04		
		Consultant/ TCE Comment (s)/ Observation(s) dtd. 05.08.2020	Customer/ IOCL Comment (s)/ Observation(s) dtd. 09.08.2020	Resolution(s)	Consultant/ TCE Comment (s)/ Observation(s) dtd. 07.09.2020	Customer/ IOCL Comment (s)/ Observation(s) dtd. 10.09.2020	Resolution(s)	Consultant/ TCE Comment (s)/ Observation(s) dtd. 12.10.2020	Customer/ IOCL Comment (s)/ Observation(s) dtd. 15.10.2020	Resolution(s)	Consultant/ TCE Comment (s)/ Observation(s)	Customer/ IOCL Comment (s)/ Observation(s)	Resolution(s)	Consultant/ TCE Comment (s)/ Observation(s) dtd. 17.02.2021	Customer/ IOCL Comment (s)/ Observation(s) dtd. 18.02.2021	Resolution(s)
1	Ground floor	Section to be shown for Entry/ exit of cables arrangement as marked in drawing.		This trench section is provided for future customer requirement only. However the section of trench passing through AHU room and store shall be provided with box culvert arrangement.	Ok noted	Noted										
2	Ground floor	Entry/exit of cables shall be through the pipe sleeves for all trenches? Fire sealants shall be provided at this locations as marked in drawing.		Noted and complied.	Ok noted	Noted										
3	Ground floor	Kindly clarify cable trench type changed from Tr-1 to Tr-2. Out going cables from GIS building will be same at this location then why tray type changed as marked in drawing. Pls clarify.		Please note that in TR-2 section, control/ power cables from transformer along with new PMCC cables shall be covered. On the other side of cable trench TR-1 shall cover the control/ power cables going to PR CPP extension control room/ nearest transformer.	Ok noted	Noted										
4	Ground floor	Details for cable arrangement between GIS & LCC to be shown as marked in drawing.		The purpose of this drawing is show the indicative details of trays and hanger rack assembly. The details for cable laying arrangement shall be as per OEM drawing, which shall be submitted separately.	Ok noted	Noted										
5	Ground floor	Pipe details to be mentioned as marked in drawing.		Noted and complied.	Ok noted	Noted										
6	First floor	line thickness to be reduced as marked in drawing		Noted and complied.	Ok noted	Noted										
7	First floor	View A-A type arrangement is for hanger rack assembly as marked in drawing		Noted and additional details are incorporated.	Ok noted	Noted										
8	First floor	Tray details naming shall be marked in Dark for identification. Eg-TR0, TR1, TR2 etc as marked in drawing.		Noted and complied.	Ok noted	Noted										
9	First floor	View C-C not shown as marked in drawing		Noted and complied.	Ok noted	Noted										
10	TR-0	separate cable trays to be shown for power & control		Noted and complied.	Ok noted	Noted										
11	Notes	Points to be added in Notes 7. Cable & cable tray / trench opening in wall shall be through pipe sleeves.The same shall be sealed by fire proof & water proof sealing system. 8. Cable & cable trays shown for future panel shall be covered with chequered plate		Noted and complied.	Ok noted	Noted										
12	View B-B	View B-B not marked in drawing. to be shown		Noted and complied.	Ok noted	Noted										
13	General	Cable tray shall be sized considering single layer of cables for power cables (HT or LT). For control or instrumentation cables maximum double layer per tray is acceptable as per Technical corrigendum sr. no-35.		Noted.	Ok noted	Noted										
14	General	Separate cable trays shall be selected for HT cables, LT power cable, LT control cable & Instrumentation cables/communication cable.		Noted.	Ok noted	Noted										
15	General	Support span to be mentioned.		Noted and complied.	Ok noted	Noted										
16	General	Cable trays, racks and trenches shall be sized to allow for 30% future cables		Noted.	Ok noted	Noted										
17	General	Cable trench details avoiding beams section details to be shown.		Hanger rack assembly arrangement shall be made in such a manner that fouling with beam shall be avoided.	Ok noted	Noted										
18	General	Vertical arrangement details of cable trays arrangement to be shown.		Noted and complied.	Ok noted	Noted										
19	General	Small power and control cable trays between main tray and GIS to be provided for cable connection between LCC and GIS.		Such routing of cable going in/ around GIS shall be taken care by OEM, for which drawing shall be submitted separately.	Ok noted	Noted										
20	General	All cable trays including all trays in same support to be numbered which will be referred in cable schedule. Power and control cable tray, size of tray may also be mentioned in numbering of tray like ex-600-P, ex-300-C etc.		It may please be noted that maximum control/ power cabling shall be in/ around Cable cellar only with short lengths and suitable routes of trays have been provided for that. The other routing from PR extension CPP building to GIS is already earmarked. In general, such numbering system is not followed for such a small system.	Some sort of identification of trays and routings for various cable as such need to be reviewed by BHEL how to achieve it. This is also necessary for future maintenance of cables.		Noted and same shall be done at site as per site requirement.	Noted	Noted								
21	General	How cables from SS-28 to PMCC will be brought? Route to be clarified.		Routing of this cable is already considered as per customer cable sizing input.	Ok noted but should be covered in some other drg		Noted and same shall be covered in Power Cable Schedule and Single Line Diagram of Aux, Power Supply System.	Noted								
22	General	Insert plate in cable cellar floor to be provided for future cable vertical riser support.		Exact locations of inserts plates shall be provided to civil group after finalization of details.	Ok noted however 1) Additional cable trays of smaller size will be required between GIS bay and LCP in condultation with OEM. 2) Cable supports provision for future 220kV cables for spare bays to be provided.		Noted and complied. Final details shall be provided in OEM drawing, which shall be submitted separately.	Noted								
23			All cables shall be bottom entry and exit type only. In the cellar room the entry and exit shall done through cable trench only	Noted.	Ok noted	Noted										
24			The hanger support shall not be followed. Please revise thre drawing and indicate the provision with support from the floor of the cellar. Necessary provision to be kept for man movement through and through of the cable cellar. The photograph of the existing system of the cellar shall provided seperately for bettery understanding of the system	Noted and complied.	Ok noted	Noted										
25					For LT power and control cables, GIS perforated cable tray to be used.		In line with technical specification, only ladder trays are envisaged.	As per specification cl no-5.7.1 "cable trays may be either of perforated sheet type or of ladder type". So Perforated type cable tray can be used for control cables & Ladder type for Power cables, however ladder tray also acceptable.		Noted for ladder type trays.						
26					First floor equipment to be shown in light to check and confirm location of trays and to avoid conflict		Noted and complied.	Noted								
27						It appears that the cable trays are also shown inside the AC plant rooms. Please check and correct the same.	In some part of AC Plant Room, trays are required for accomodation of cable coming from SAS/ Control Room.	Noted	Kindly arrange to relocate in such a manner that same does not foul inside the AC room. The maintenance and laying work in future shall become an issue. The relocation is required in the drawing.	Noted. Necessary modifications are done for minimum requirement of panels in Control Room.						
28						Tray supports are even shown in batteyr rooms which is to be checked and changed.	To accommodate the cables from Battery Chargers and other panels, trays are provided in atittery room to accomodare the cables emanating from the above panels.	Noted	Kindly arrange to relocate in such a manner that same does not foul inside the AC room. The maintenance and laying work in future shall become an issue. The relocation is required in the drawing.	Noted, however it may please be noted that auxiliary panels are to be accomodated and hence it is not possible to accommodate the same.						
29						Under TR-0 drawing, the width of the tray and trench both are shown as 750 mm. Please check and revise. Also please provide location where TR-0 is to be used.	Trench section TR-0 shall be used in battery room to connect the cables from battery bank to battery charger. This section is located in battery room.	Noted	Noted							
30						Insert plates to be indicated in TR-3H drawing for future trays mounting purposes for atleast 3 tier trench	Noted and complied. Please refer section drawing of TR-3H and notes (point no. 10)	Noted	Noted							
31						TR-3H is located inside the Ahu room. Please relocate in such a manner to avoid passing through AHU room as this trench has been proposed to house 220 KV cables in the future.	Bending in 220kV Cables is not recommended and hence cable trench passing through AHU room shall be provided with box culvert.	Noted	Noted. Box culvert is acceptable.	In line with discussion, 220kV Cable trench meant for future requirement is kept upto Cellar Room only to avoid installation issues in AHU Room.						

32						At the man entry/ exit location, the cable trays structures to be avoided upto 2 meters in order to provide man access to all rows of the cable trays inside the cellar room. The typical photograph shall be provided seperately for visualisation of the same.	The arm of hanger assemby is located at the height of 3.6m, which is sufficient for man movement. However, relocation of particular to hanger assemblly can be done at site.	Noted	The height of the cables trays to be reduced to the man height level only. The installation of cable trays on each member shown in the drawings to be lowered down in such a manner that the height of the top of the tray is max upto the man height. Current proposition shall require scaffolding arrangement every time the cable laying is required and hence is not preferable from our side. Also proper spacing at the entry and exit location in each row of about 2 meters to be provided for easy access to each row.	Noted and compiled in line with site discussion.						
33									The calculation on the no. of rows and column selection in line with the render requirement of 30% spare capacity to be provided. The approximate cable count to be used as a basis for calculation of cable tray numbers.	Noted.						
34													Strcuture details are changed as per actual loading requirements.			
35															The TR-2 to be reverified and changed to TR-1 type only, else the cable details along with the provisioon of 30% spare capacity to be confirmed with current design of TR-2.	Noted and compiled. Additional space is provided for VAM MCC-

NOTE:

CONTRACTOR IS OBLIGED TO FURNISH THIS SHEET (DULY FILLED UP WITHRESOLUTION TO ALL CUSTOMER/ CONSULTANT COMMENTS ALONGWITH REVISED DRAWINGS

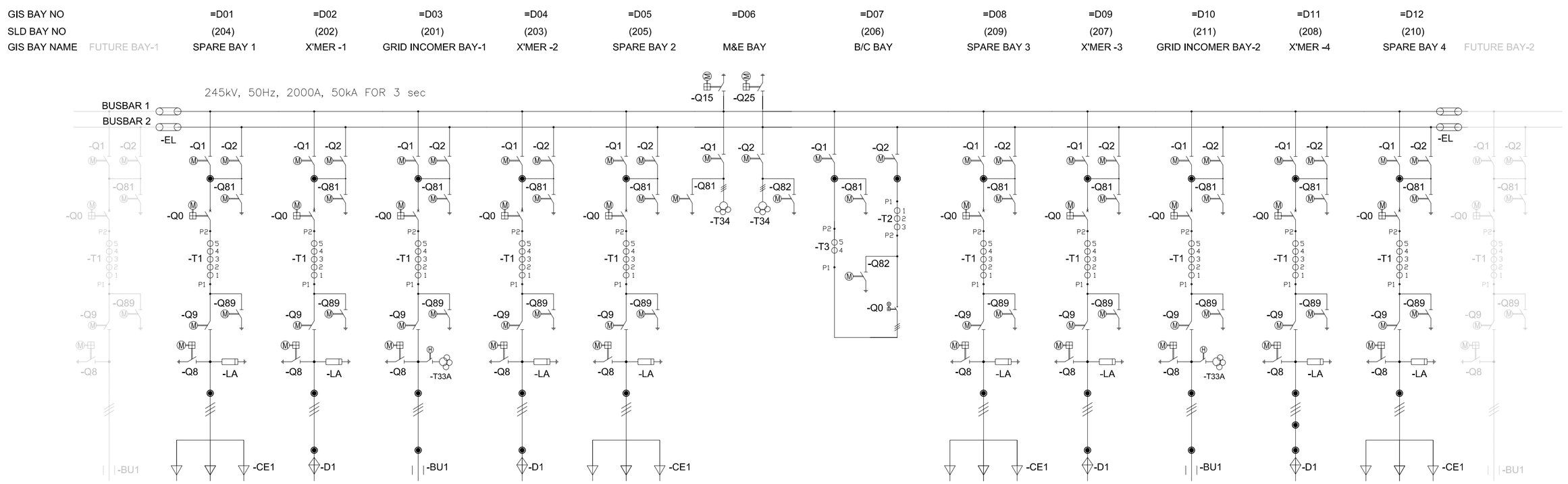

IF IN DOUBT ASK!

ALL INFORMATION CONTAINED IN THIS DOCUMENT IS CONFIDENTIAL & SHOULD NOT BE USED WITHOUT PRIOR CONSENT OF CG POWER AND INDUSTRIAL SOLUTIONS LIMITED.

TATA CONSULTING ENGINEERS LIMITED
VENDOR DOCUMENT REVIEW STATUS

- ☐ A. Document approved as submitted; proceed with fabrication/construction.
- ☐ B. Document approved subject to comments noted; proceed with fabrication/construction considering our comments.
- ☐ C. Our comments are noted on this marked up print.
- ☐ D. Our comments are noted in the memo attached to the forwarding transmittal Letter No. ..... Dated .....
- ☐ E. Correct original of this document to reflect our comments and resubmit for approval.
- ☐ F. Correct original of this document to reflect our comments and resubmitted for records.
- ☐ G. Document of this category are for information only and not for approval. Information furnished on the document is noted.
- ☐ H. Document reviewed against our previous comments and other revisions highlighted and identified by the vendor.
- ☐ I. Document returned without review.

Approval conveyed herein neither relieves Vendor/Contractor of his contractual obligations and his responsibilities for correctness of dimensions, materials of construction, weights, quantities, design details, assembly fits, system/performance requirements and conformity of supplies with Indian Statutory Laws as may be applicable, nor does it limit the Purchaser's rights under the contract.

Reviewed by SRP/AKN Date 13.05.2021

TATA CONSULTING ENGINEERS LIMITED MUMBAI

SINGLE LINE DIAGRAM - 220kV GIS

● INDICATES LOCATION OF PD SENSOR

INDICATES 3-PHASE SYSTEM

TECHNICAL DETAILS OF PD SENSOR	
I)	TYPE OF SENSOR : UHF
II)	SENSITIVITY : 5pC
III)	CABLE CONNECTION TYPE: N TYPE
IV)	MOUNTING METHOD : INTERNAL
V)	PD SENSOR QTY

	BAY NO	D01	D02	D03	D04	D05	D06	D07	D08	D09	D10	D11	D12	TOTAL
	QTY (Nos)	06	09	09	09	06	–	06	06	09	09	12	06	87

NOTES:
1) ALL HARDWARE COMPONENTS RELATED TO 220kV GIS ENVISAGED IN THE KEY SLD DRW.REF. TB-411-510-001(REV-05)SHALL BE CONSIDERED FOR SUPPLY.

REFERNCE		
DRAWING NAME	NO.	REV.
SINGLE LINE DIAGRAM	TB-411-510-001	05

FOR APPROVAL

PROJECT :
LSTK JOB FOR ISBL WORK OF 220kV GRID POWER IMPORT AT
INDIAN OIL - PANIPAT REFINERY
LOA NO. RPRC182491/26286965 DTD.24.01.2020

OWNER : INDIAN OIL CORPORATION LIMITED

CONSULTANT : TATA CONSULTING ENGINEERS LIMITED

EPC CONTRACTOR : भारत हेवी इलेक्ट्रिकल्स लिमिटेड
ट्रांसमिशन परियोजना विभाग
BHARAT HEAVY ELECTRICALS LIMITED
TRANSMISSION PROJECTS DIVISION

TITLE / DESCRIPTION :-
220KV GIS-GAS SCHEMEATIC WITH SINGLE LINE DIAGRAM (INCLUDING CT VT PARAMETERS)

DRAWING NO: TB-411-316-079-01

NO	REVISION	NAME	DATE
5			
4			
3	REVISED AS PER CLIENT COMMENT DATED 23.03.2021.	KFS	24.03.2021
2	REVISED AS PER CLIENT COMMENT DATED 06.02.2021.	SSP	17.02.2021
1	REVISED AS PER CLIENT COMMENT DATED 29.12.2020.	SSP	06.01.2021

DRN KFS
CHD SSP
APPD KSP
SCALE: N.T.S.
DATE: 16.12.2020

TITLE: SINGLE LINE DIAGRAM
FOR: 245kV
GIS TYPE: GAI3S
ALL DIMENSIONS ARE IN mm

THIRD ANGLE PROJECTION

CG POWER AND INDUSTRIAL SOLUTIONS LIMITED.
GIS DIVISION
AMBAD, NASHIK

CGPISL DRG NO:20606D_101 | 1 /3 | R3

CGPISL DRG NO:20606D_101 | 2 /3 | R3

IF IN DOUBT ASK!

ALL INFORMATION CONTAINED IN THIS DOCUMENT IS CONFIDENTIAL & SHOULD NOT BE USED WITHOUT PRIOR CONSENT OF CG POWER AND INDUSTRIAL SOLUTIONS LIMITED.

1) SCHEDULE OF EQUIPMENT WITH LEGENDS

SR.NO	DESIGNATION	SYMBOL	ITEM DESCRIPTION	QTY
1	-Q0		220kV , 2000A, 1*3 PHASE CIRCUIT BREAKER (SPRING ENERGY STORED TYPE MECH.)	11 SET
2	-Q9		220kV , 2000A, 1*3 PHASE DISCONNECTING SWITCH WITHOUT EARTH SWITCH	10 SET
3	-Q1 -Q2		220kV , 2000A, 1*3 PHASE DISCONNECTING SWITCH WITHOUT EARTH SWITCH	24 SET
4	-Q81,Q82 -Q89		220kV , 2000A, 1*3 PHASE EARTHING SWITCH	24 SET
5	-Q8 -Q15,Q25		220kV , 2000A, 1*3 PHASE FAST ACTING EARTHING SWITCH	12 SET
6	-LA		1-PHASE LIGHTNING ARRESTER 198KV, 10KA, CLASS-3	24 NOS.
7	-T1		220kV , 1-PHASE CURRENT TRANSFORMER	30 NOS.
8	-T2		220kV , 1-PHASE CURRENT TRANSFORMER	3 NOS.
9	-T3		220kV , 1-PHASE CURRENT TRANSFORMER	3 NOS.
10	-T34		220kV 1-PHASE INDUCTIVE VOLTAGE TRANSFORMER,	6 NOS.
11	-T33A		220kV 1-PHASE INDUCTIVE VOLTAGE TRANSFORMER, MANUAL ISOLATING LINK	6 NOS.
12	-BU1		220kV , 1-PHASE SF6 TO AIR BUSHING	6 NOS.
13	-D1		220kV 1-PHASE SF6 TO OIL BUSHING	12 NOS.
14	-CE1		220kV , 1-PHASE SF6 TO CABLE MODULE	36 NOS.
15	-EL		220kV 1-PHASE MANUAL EXTENSION LINK	12 NOS.
16*	--	—	220kV 1-PHASE GIS BUSDUCT	1 LOT

NOTES:
*LENGTH OF BUSDUCT SHALL BE FINALIZED AFTER FINALIZATION OF LAYOUT

2) COMMON TECHNICAL DATA

SR.NO	PARAMETER	VALUE
1	APPLICABLE STANDARD GAS INSULATED SWITCHGEAR CIRCUIT BREAKER DISCONNECTOR & MAINTENANCE EARTH SWITCH CURRENT & VOLTAGE TRANSFORMER LIGHTNING ARRESTOR SF6 GAS	 IEC62271-203 IEC62271-100 IEC62271-102 IEC61869-1,2 & 3 IEC60099 IEC60376
2	RATED VOLTAGE (HIGHEST SYSTEM VOLTAGE)	245kVrms
3	SERVICE VOLTAGE (WORKING VALUE)	220kVrms
4	RATED FREQUENCY	50Hz
5	LIGHTNING IMPULSE WITHSTAND VOLTAGE TO EARTH	1050kVp
6	LIGHTNING IMPULSE WITHSTAND VOLTAGE ACROSS ISOLATING DISTANCE	1200kVp
7	POWER FREQUENCY WITHSTAND VOLTAGE TO EARTH	460kVrms
8	POWER FREQUENCY WITHSTAND VOLTAGE ACROSS ISOLATING DISTANCE	530kVrms
9	RATED SHORT TIME WITHSTAND CURRENT	50kA
10	RATED DURATION OF SHORT CIRCUIT	3Sec
11	RATED PEAK WITHSTAND CURRENT	125kAp
12	PROTECTION & CONTROL SUPPLY (Vdc) 1. TRIP COIL SUPPLY 2. CLOSE COIL SUPPLY 3. SPRING CHARGING MOTOR SUPPLY	 220VDC (-15% +10%) 220VDC (70% +110%) 220VDC (85% +110%) 220VDC (85% +110%)
13	HEATER AND LIGHTNING AUXILIARY SUPPLY	230VAC (-15%,+10%)
14	PAINT SHADE	RAL7032 (PEBBLE GRAY)
15	MINIMUM AMBIENT TEMPERATURE (°C)	-5°C
16	MAXIMUM AMBIENT TEMPERATURE (°C)	+50°C
17	DESIGN TEMPERATURE (°C)	+45°C

3) PARAMETERS FOR VOLTAGE TRANSFORMER

220kV 1-PHASE INDUCTIVE VOLTAGE TRANSFORMER (T34)	6 NOS.
Primary Voltage:220/√3KV Sec. Voltage I:110/√3V, CL.3P, 50VA Sec. Voltage II:110/√3V, CL.3P, 50VA Sec. Voltage III:110/√3V, 0.2, 120VA	
220kV 1-PHASE INDUCTIVE VOLTAGE TRANSFORMER (T33A) (WITH MANNUAL ISOLATING LINK)	6 NOS.
Primary Voltage:220/√3KV Sec. Voltage I:110/√3V, CL.3P, 50VA Sec. Voltage II:110/√3V, CL.3P, 50VA Sec. Voltage III:110/√3V, 0.2, 50VA	

4) PARAMETERS FOR CURRENT TRANSFORMER

1-Phase Current Transformer (T1)-GRID INCOMER BAY, X'MER BAY AND SPARE BAY		30 NOS
Core 1	2000-1000-500/1A; min KPV (V)= 2000-1000-500V, Ie(mA)=30-60-120 @VK, Rct(Ω)=10-5-2.5 Class PS (Special Protection)	
Core 2	2000-1000-500/1A; min KPV (V)= 2000-1000-500V, Ie(mA)=30-60-120 @VK, Rct(Ω)=10-5-2.5 Class PS (Special Protection)	
Core 3	2000-1000-500/1A; Class 0.2S,Burden(VA)=30VA AT 500A, ISF≤5 (Metering)	
Core 4	2000-1000-500/1A; min KPV (V)= 2000-1000-500V, Ie(mA)=30-60-120 @VK, Rct(Ω)=10-5-2.5 Class PS (Special Protection)	
Core 5	2000-1000-500/1A; min KPV (V)= 2000-1000-500V, Ie(mA)=30-60-120 @VK, Rct(Ω)=10-5-2.5 Class PS (Special Protection)	
1-Phase Current Transformer (T2)- B/C BAY		3 NOS.
Core 1	2000-1000-500/1A; min KPV (V)= 2000-1000-500V, Ie(mA)=30-60-120 @VK, Rct(Ω)=10-5-2.5 Class PS (Special Protection)	
Core 2	2000-1000-500/1A; min KPV (V)= 2000-1000-500V, Ie(mA)=30-60-120 @VK, Rct(Ω)=10-5-2.5 Class PS (Special Protection)	
Core 3	2000-1000-500/1A; Class 0.2S,Burden(VA)=30VA AT 500A, ISF≤5 (Metering)	
1-Phase Current Transformer (T3)- B/C BAY		3 NOS.
Core 4	2000-1000-500/1A; min KPV (V)= 2000-1000-500V, Ie(mA)=30-60-120 @VK, Rct(Ω)=10-5-2.5 Class PS (Special Protection)	
Core 5	2000-1000-500/1A; min KPV (V)= 2000-1000-500V, Ie(mA)=30-60-120 @VK, Rct(Ω)=10-5-2.5 Class PS (Special Protection)	

FOR APPROVAL

PROJECT :
LSTK JOB FOR ISBL WORK OF 220kV GRID POWER IMPORT AT
INDIAN OIL - PANIPAT REFINERY
LOA NO. RPRC182491/26286965 DTD.24.01.2020

OWNER : INDIAN OIL CORPORATION LIMITED

CONSULTANT : TATA CONSULTING ENGINEERS LIMITED

EPC CONTRACTOR :
भारत हेवी इलेक्ट्रिकल्स लिमिटेड
दांसमिशन परियोजना विभाग
BHARAT HEAVY ELECTRICALS LIMITED
TRANSMISSION PROJECTS DIVISION

TITLE / DESCRIPTION :-
220KV GIS-GAS SCHEMEATIC WITH SINGLE LINE DIAGRAM
(INCLUDING CT VT PARAMETERS)

DRAWING NUMBER: TB-411-316-079-01

NO	REVISION	NAME	DATE
5			
4			
3	REVISED AS PER CLIENT COMMENT DATED 23.03.2021.	KFS	24.03.2021
2	REVISED AS PER CLIENT COMMENT DATED 06.02.2021.	SSP	17.02.2021
1	REVISED AS PER CLIENT COMMENT DATED 29.12.2020.	SSP	06.01.2021

DRN KFS
CHD SSP
APPD KSP
SCALE: N.T.S.
DATE: 16.12.2020

TITLE: SINGLE LINE DIAGRAM (INCLUDING CT,VT PARAMETERS)
FOR: 245kV
GIS TYPE: GAI3S
ALL DIMENSIONS ARE IN mm

THIRD ANGLE PROJECTION
CG POWER AND INDUSTRIAL SOLUTIONS LIMITED.
GIS DIVISION
AMBAD, NASHIK

CGPISL DRG NO20606D_101 | 2 /3 | R3

CGPISL DRG NO:20606D_101 | 3 /3 | R3

IF IN DOUBT ASK!

GIS BAY NO		=D01	=D02	=D03	=D04	=D05	=D06	=D07	=D08	=D09	=D10	=D11	=D12	
SLD BAY NO		(204)	(202)	(201)	(203)	(205)		(206)	(209)	(207)	(211)	(208)	(210)	
GIS BAY NAME	FUTURE BAY-1	SPARE BAY 1	X'MER BAY-1	GRID INCOMING BAY-1	X'MER BAY-2	SPARE BAY 2	M&E BAY	B/C BAY	SPARE BAY 3	X'MER BAY-3	GRID INCOMING BAY-2	X'MER BAY-4	SPARE BAY 4	FUTURE BAY-2

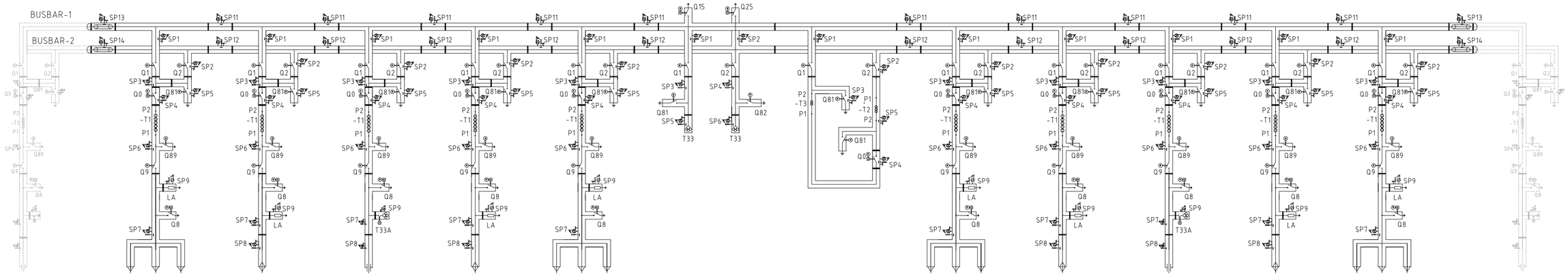

GAS SCHEMATIC DIAGRAM-220kV GIS

LEGEND

	DISCONNECTOR (BUSBAR SIDE) THREE POLE, MOTOR OPERATED		DISCONNECTOR (LINE SIDE) THREE POLE, MOTOR OPERATED
	CIRCUIT BREAKER SINGLE POLE SPRING ENERGY STORED TYPE MECH.		HIGH SPEED EARTH SWITCH (INSULATED TYPE)
	1–PHASE CURRENT TRANSFORMER		1–PHASE INDUCTIVE VOLTAGE TRANSFORMER
	1–PHASE SF6 TO AIR BUSHING		MAINTENANCE EARTH SWITCH (INSULATED TYPE)
	1–PHASE CABLE END TERMINATION		1–PHASE SF6 TO OIL TERMINATION
	1–PHASE MANUAL EXTENSION LINK		1–PHASE LIGHTNING ARRESTOR
	1–PHASE INDUCTIVE VOLTAGE TRANSFORMER (MANUAL ISOLATING LINK)		1–PHASE BUS DUCT

ACCESSORIES OF GAS COMPARTMENT

	GAS CONNECTION		RUPTURE DISC ASSY
	ABSORBENT		DENSITY MONITOR

GAS PRESSURES

	FILLING PRESSURE	SETTING PRESSURES OF GAS DENSITY RELAYS		ALARM	RUPTURING DISC OPERATING PRESSURE (g)	INDICATION
CIRCUIT BREAKER	6 BAR (g)	1st	5.4 BAR (g)	REFILL	10.5 BAR (g)	
		2nd	5.0 BAR (g)	LOCKOUT		
		3rd	5.0 BAR (g)	ISOLATING		
OTHER PARTS OF GIS	5 BAR (g)	1st	4.4 BAR (g)	REFILL	8.5 BAR (g)	
		2nd	4 BAR (g)	ISOLATING		

NOTE:–

1) GIS CONFIGURATION IS SINGLE PHASE ENCAPSULATED
2) CB,LA,VT,EACH PHASE OF GAS COMPARTMENT IS EQUIPPED WITH GAS CONNECTION(DN20), ABSORBENT RUPTUR DISC AND DENSITY MONITOR.
3) GAS COMPARTMENT DESIGNATION

SP | 1
SF6 PRESSURE SWITCH — GAS COMPARTMENT NUMBER

4) IN OFFERED GIS CABLE TERMINATION & HIGH SPEED EARTH SWITCH SEATS ON SAME MODULE, BEING THREE CABLE PER PHASE , IT IS NOT POSSIBLE TO SEPARATE OUT THIS COMPARTMENT. HENCE HIGH SPEED EARTH SWITCH & CABLE END IS TREATED AS SINGLE COMPARTMENT.

PROJECT :
LSTK JOB FOR ISBL WORK OF 220kV GRID POWER IMPORT AT
INDIAN OIL - PANIPAT REFINERY
LOA NO. RPRC182491/26286965 DTD.24.01.2020

OWNER : INDIAN OIL CORPORATION LIMITED

CONSULTANT : TATA CONSULTING ENGINEERS LIMITED

EPC CONTRACTOR : भारत हेवी इलेक्ट्रिकल्स लिमिटेड
ट्रांसमिशन परियोजना विभाग
BHARAT HEAVY ELECTRICALS LIMITED
TRANSMISSION PROJECTS DIVISION

TITLE / DESCRIPTION :-
220KV GIS-GAS SCHEMEATIC WITH SINGLE LINE DIAGRAM (INCLUDING CT VT PARAMETERS)

BHEL DRAWING NUMBER: TB-411-316-079-01

NO	REVISION	NAME	DATE
5			
4			
3	REVISED AS PER CLIENT COMMENT DATED 23.03.2021.	KFS	24.03.2021
2	REVISED AS PER CLIENT COMMENT DATED 06.02.2021.	SSP	17.02.2021
1	REVISED AS PER CLIENT COMMENT DATED 29.12.2020.	SSP	06.01.2021

DRN KFS
CHD SSP
APPD KSP
SCALE: N.T.S.
DATE: 16.12.2020

TITLE: SCHEMATIC FOR GAS MONITORING SYSTEM
FOR: 245kV
GIS TYPE: GAI3S
ALL DIMENSIONS ARE IN mm

THIRD ANGLE PROJECTION
CG POWER AND INDUSTRIAL SOLUTIONS LIMITED.
GIS DIVISION
AMBAD, NASHIK

CGPISL DRG NO:20606D_103 | 3 /3 | R3

ALL INFORMATION CONTAINED IN THIS DOCUMENT IS CONFIDENTIAL & SHOULD NOT BE USED WITHOUT PRIOR CONSENT OF CG POWER AND INDUSTRIAL SOLUTIONS LIMITED.

Project	**LSTK job for ISBL work of 220KV Grid Power Import at IOCL, Panipat Refinery**		
Customer	M/s Indian Oil Corporation Limited (IOCL)		
Consultant	M/s Tata Consulting Engineers Limited		
Main Contractor	M/s Bharat Heavy Electricals Ltd		
Document Name	Write-up on 245kV GIS Single Phase Busbar Encapsulation Design features and fault locating methodology.		
BHEL Document No	-		
CGPISL Document No	20606D_348		
Date	21.04.2021	Rev No	R0
Applicable For	220kV GIS		

PROJECT :
LSTK JOB FOR ISBL WORK OF 220kV GRID POWER IMPORT AT
INDIAN OIL - PANIPAT REFINERY
LOA NO. RPRC182491/26286965 DTD.24.01.2020

OWNER :
INDIAN OIL CORPORATION LIMITED

CONSULTANT :
TATA CONSULTING ENGINEERS LIMITED

EPC CONTRACTOR :
भारत हेवी इलेक्ट्रिकल्स लिमिटेड
ट्रांसमिशन परियोजना विभाग
BHARAT HEAVY ELECTRICALS LIMITED
TRANSMISSION PROJECTS DIVISION

Smart solutions. Strong relationships.

CG Power And Industrial Solutions Ltd

FOR INFORMATION

Rev No	Revision Details	Approved By	KSP
		Date	09.04.2021
		Checked By	KSP
		Date	09.04.2021
		Prepared By	SSP
R0	First Issue	Date	09.04.2021

As per IOCL/TCE/BHEL GIS Specifications, offered 245kV GIS is Double Busbar with Bus Coupler between Busbar-1 and Busbar-2.

For simplicity in layout and operation, offered GIS is Single-Phase-Encapsulated (S-P-E) type wherein, all equipments including Circuit Breaker, Current Transformer, Disconnectors, Earthing Switches, High Speed Earthing Switches and Busbar-1 and Busbar-2 all are single-phase encapsulated type, comprising of Busbar disconnector as part of busbar chamber.

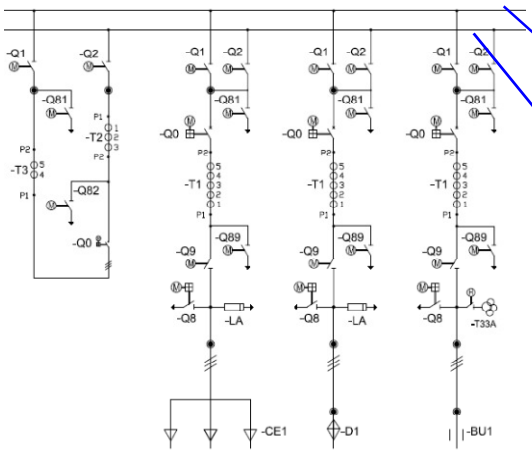

Double Busbar Scheme with Bus Coupler

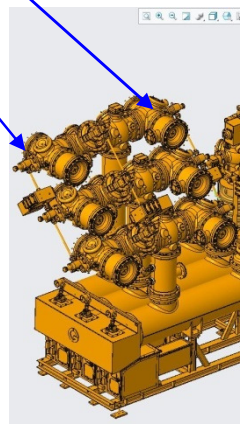

Actual Double Busbar GIS Bay (Typical)

Being mechanically separate enclosures and independent assemblies, S-P-E type encapsulation offers many advantages, some of them as listed below,

a) Single-phase fault (if any) in any phase gets restricted to particular phase only, it does not result into three-phase fault as it may be the case in other types.
b) Gas handling is restricted to only single phase gas chamber & its adjacent chamber, against throughout busbar running along the length GIS installation.
c) Fault finding and maintenance is relatively simple as compared to other Busbar schemes.

Offered 245kV GIS is Type Tested as per IEC 62271-203. This standard specifies for various gas sectionalisation and buffer gas chamber schemes as per substation's strategic location. Considering importance of said 245kV GIS substation at IOCL Panipat, CGPISL has provided both types of additional gas buffer chambers complying with IEC standard as stated below :

****

- additional gas buffer chamber in each phase of both Busbars between adjacent bays.
- additional gas buffer chamber between Circuit Breaker and Busbar

IEC Standard specifies two types of gas sectionalisation schemes. In one case there are not additional gas chambers between two adjacent bays as shown in SECTION-1 below. In other option it specified additional gas chamber as shown in Section-3.

SECTION-1

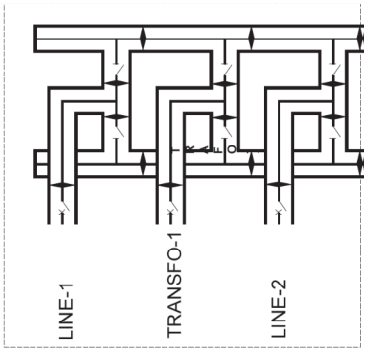

Without buffer chamber between adjacent bays

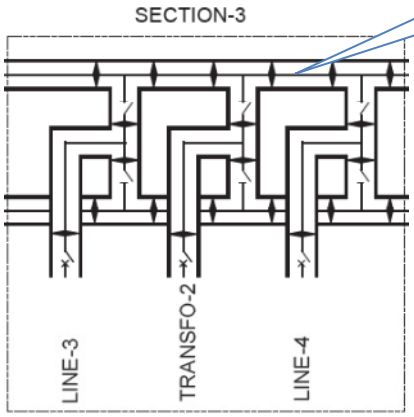

With buffer chamber between adjacent bays

CG has provided additional buffer chambers as specified in Section-3 of IEC.

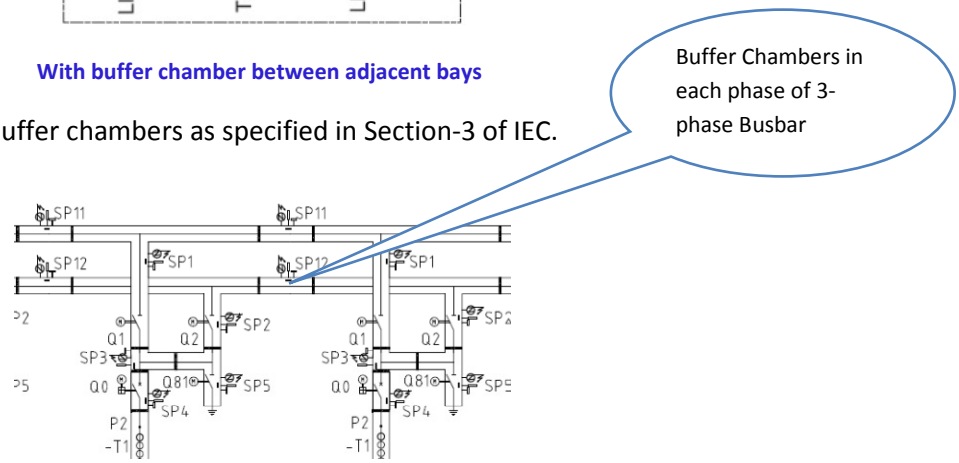

Offered CG GIS Scheme fully comply with IEC standard

Every gas chamber is equipped with four facilities such as

****

- Gas filling port (DN20 Valve),
- gas monitoring port (Valve & Manometer),
- moisture absorbent and
- Rupture disc.

Before filling SF6 gas, every gas chamber is subjected to Vacuuming cycle to extract inside air and moisture. Moisture absorbent is placed inside chamber to absorb residual traces of moisture remained inside gas chamber.

GIS parts are manufactured under strict quality norms, assembled, tested and erected in controlled environment. As per IEC standard, every GIS module after assembly undergo routine tests in factory, thereafter, after completion of erection again undergoes site tests to check correct transport, handling and assembly.

Assembly & Testing at Factory, Erection, Testing and Commissioning at Site is done under qualified supervision. After churning through strict quality checks at factory and at site, once put it in service GIS is made to give minimal trouble. Depending on its use over the years some non-conformities may pop-up, they are as under.

Deterioration of Gas Quality (i.e. Purity and Dew Point) over the years in service. This could be arrested by regular check up of SF6 Purity and Dew Point temperature with frequency of measurement prescribed as follows

- 6 months from Charging of substation
- Thereafter every two years

Testing equipment required for checking of SF6 Purity and Dew point is supplied along with GIS Equipment.

Gas leakage could be another probable cause, however with low probability. Locating method is through regular record keeping of gas pressure of each manometer and pin-pointing of leakage using Portable Gas Leak Detector which is part of Tools and Equipment to be supplied along with GIS equipment.

****

Gas Leak Detector

In case of Internal arc inside chamber, may results into effects similar to either that mentioned in a) above or in the rare extreme case into over pressure, for which provision of rupture disc is made on each gas chamber.

Difficulties in operation of Motor Drives of Busbar Disconenctor. All motor drives/mechanism are external to gas chamber, hence can be attended and rectified without involving gas handling.

****

Smart solutions. Strong relationships.	Project	LSTK job for ISBL work of 220KV Grid Power Import at IOCL, Panipat Refinery
	Customer	M/s Indian Oil Corporation Limited (IOCL)
	Consultant	M/s Tata Consulting Engineers Limited
	Main Contractor	M/s Bharat Heavy Electricals Ltd
	Document Name	UHF Coupler Sensitivity Evaluation
	CGPISL Doc.No	20606D-371

UHF Coupler Sensitivity Evaluation

In 245kV Gas Insulated Switchgear (GIS)

CG Power and Industrial Solution Ltd

Reference Standard:

i) CIGRE Working Group D1.25

ii) IEC 60270

iii) IEC 62271-203

Sensitivity verification is carried out by GIS manufacturer to ascertain location, functioning & sensitivity of UHF Sensor fixed on GIS.

Partial Discharge (PD) test as a Routine test is conducted as per IEC 62271-203.

PARTIAL DISCHARGE TESTING

(CIGRE Stage I & II)

A) SENSITIVITY VERIFICATION TEST (CIGRE STEP 1)

Location of testing – Laboratory/Factory

1. PURPOSE :

The Laboratory test shall be performed in order to determine the magnitude of an artificial PD pulse, which will be applied later on-site during Step 2 of sensitivity verification, by comparison to a real defect measured according to IEC 60270. The Laboratory test is divided into Part-1 & Part-2 as described below.

2. LABORATORY TEST CONDITION :

i) Coupler A placed next to bushing and Coupler B is placed 1.43m away from Coupler A.

ii) PD experiment setup is prepared with 5 bar pressure and HVAC applied to get 5pC PD activity.

3. LABORATORYTEST PART-1 PROCEDURE :

i) A real defect is placed close to the UHF sensor **A** of a Laboratory set-up as shown in Figure 1.

ii) The defect will start to discharge when the applied voltage is high enough. When the apparent charge of the related PD signal, measured according to IEC 60270, reaches the threshold of e.g. 5 pC,
iii) The value of the UHF signal related to the signal intensity (e.g. pulse energy, pulse magnitude) is measured at sensor **B**.

iv) This UHF signal magnitude X **(signal X)** will be used for comparison in the next step of the Laboratory test.

v) Coupler A placed next to bushing and Coupler B is placed 1.43m away from Coupler 1.

vi) PD experiment setup is prepared with 5 bar pressure and HVAC applied to get 5pC PD activity.

4. TEST SETUP :

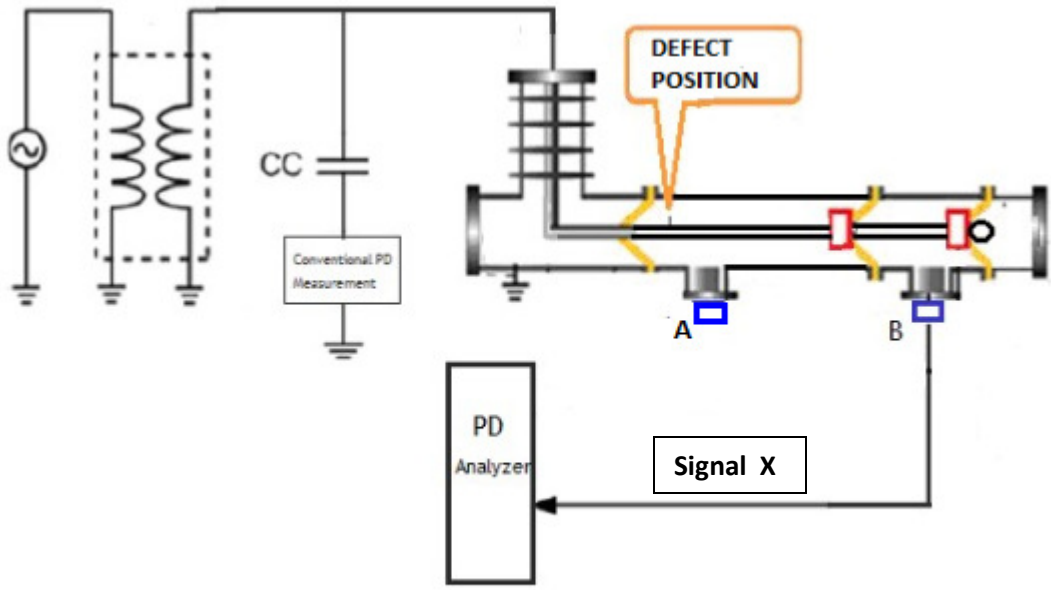

Figure-1 (Laboratory set-up for the HV measurements during sensitivity verification CIGRE Step 1)

5. TEST RESULT OF PART-1:

Input Voltage (kV)	pC value in conventional setup	Response at the coupler B (avg)
100	5	41%

6. LABORATORY TEST PART-2 PROCEDURE :

i) The artificial pulses-as described below are injected into sensor A as indicated in sensor A.

ii) The UHF signal is again acquired at sensor B, as during the preceding step.

iii) The resulting UHF signal magnitude Y (signal Y) is to be compared with the magnitude X (signalX) from the preceding HV measurements.

iv) The amplitude of the artificial pulse has to be varied until the magnitude of the measured UHF signal Y is equivalent to the magnitude of the UHF signal X within an accepted tolerance of ± 20 % [1].

v) Calibrator signal is injected from coupler A and response at the coupler B was recorded.

vi) Calibrator voltage is varied in steps to get the 41% value at the coupler B.

7. TEST SETUP :

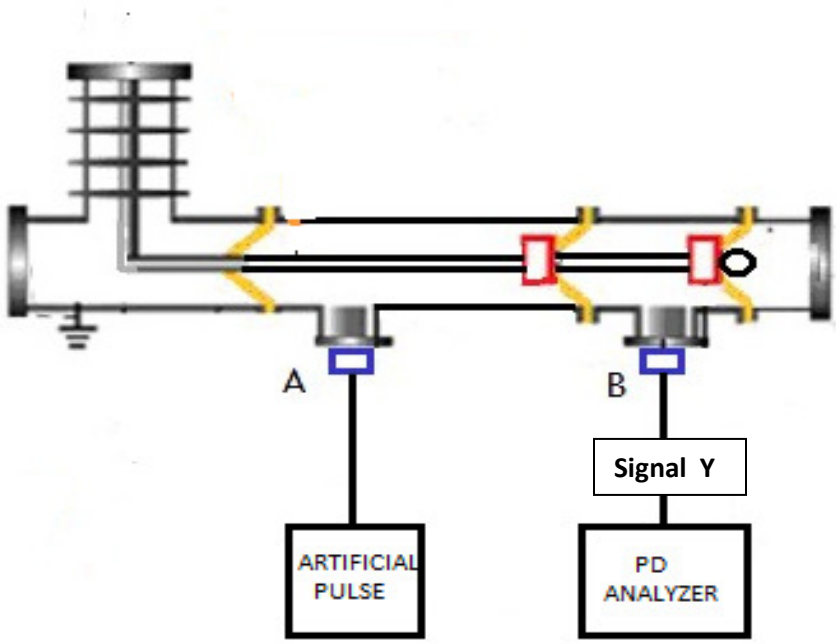

Figure-2 (Laboratory set-up for the Low Voltage measurements during sensitivity verification CIGRE Step 1)

8. TEST RESULT OF PART-2:

Sr.No	Magnitude of Injector Voltage at Coupler A (V)	Magnitude of Received Signal at Coupler B (%)
1	1	24
2	2	39
3	3	56
4	4	69
5	5	71

B) Arrangement of sensor on actual GIS bay

1. PROCEDURE :

i) 245kV GIS bay arrangement is prepared and couplers were placed at the location as shown in Fig 3.

ii) Calibrator signals were injected at Location #1 and response at Location #2 recorded.

2. TEST SETUP :

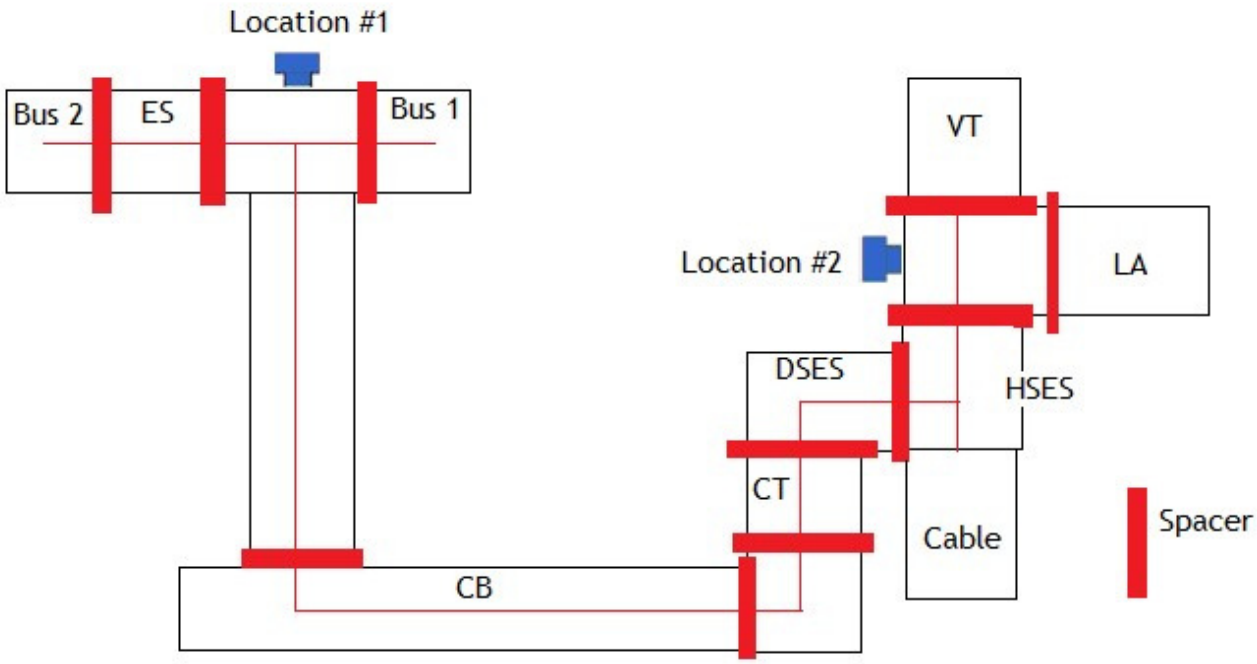

Fig. 3 Experiment setup 2 (245kV GIS Bay configuration)

3. TEST RESULT :

Sr.	Calibrator signal injected at	% at Location
1	1	No response
2	2	No response
3	3	2
4	4	5
5	5	7
6	6	15
7	7	17
8	8	20

4. CONCLUSION :

- Comparing with the IEC60270 method, the equivalent UHF injector voltage for 5pC PD activity is 3V for UHF coupler. CIGRE allows a tolerance of 20% on this result due to approximate nature of the measurement. Hence 4V would be an acceptable injection voltage.
- For the UHF coupler positioning shown in Fig. 3, the results indicate that 3 to 4 volts injection will give indication of PD on the PD analyzer. Hence UHF coupler positioning for location #1 and #2 satisfies the CIGRE's 5pC sensitivity requirement.

5. RESPONSE RECORDED IN PD ANALYZER

Case 1: During 5pC

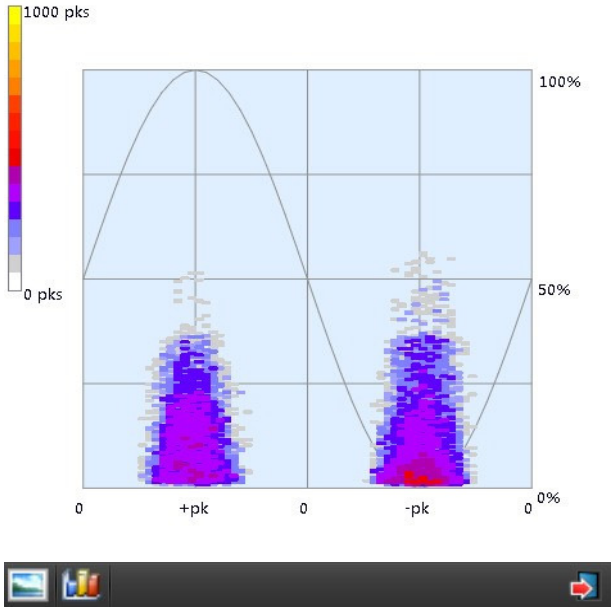

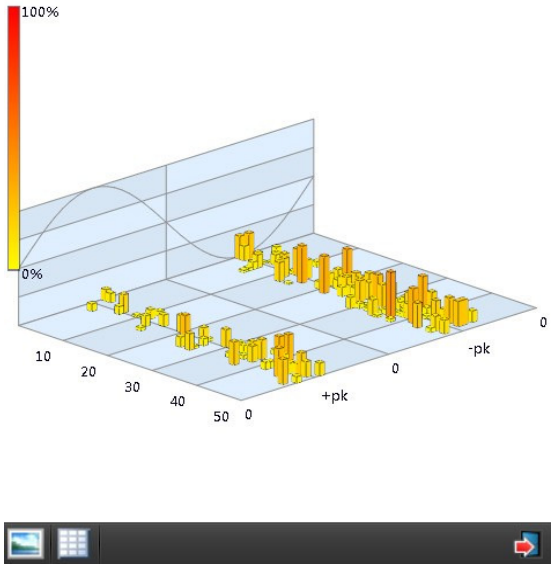

Case 2: During High voltage Injection

Injector Voltage 1V

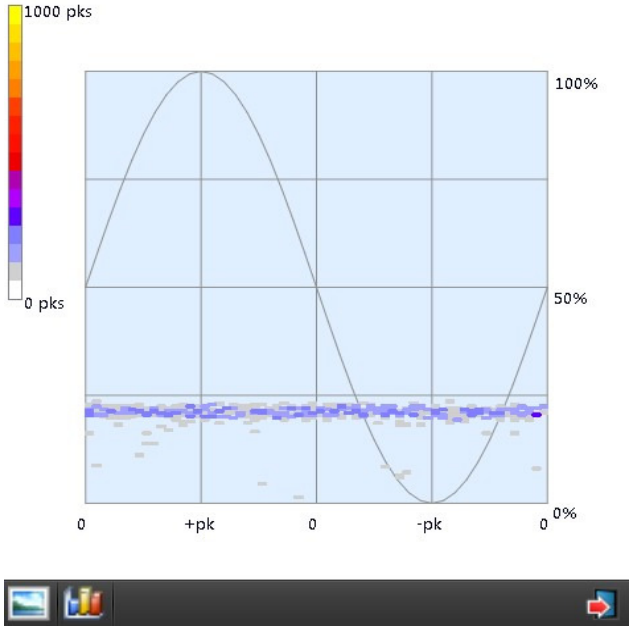

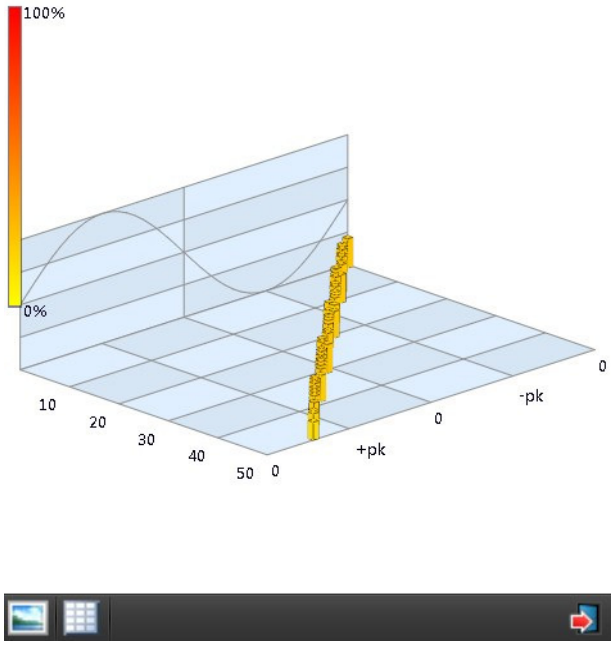

Injector Voltage 2V

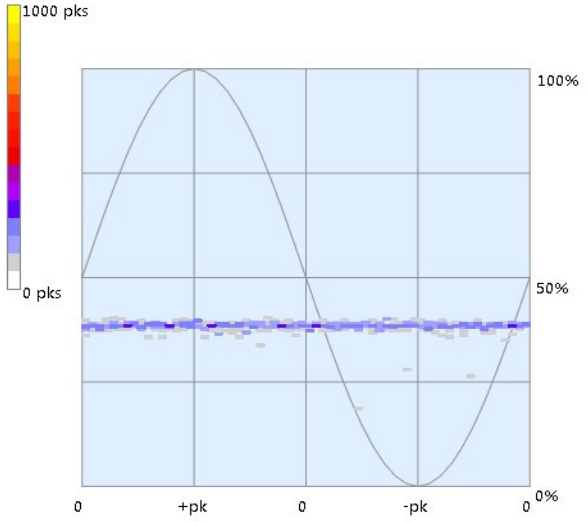

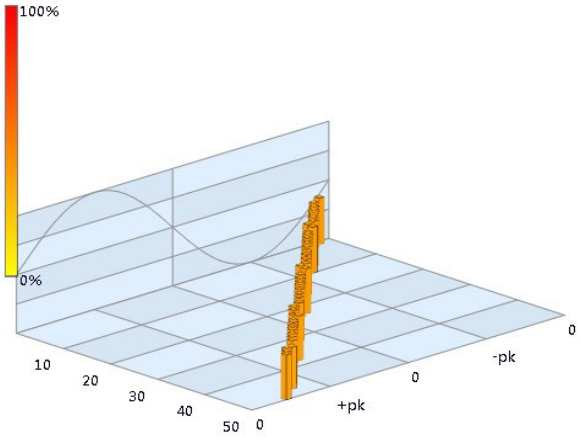

Injector Voltage 3V

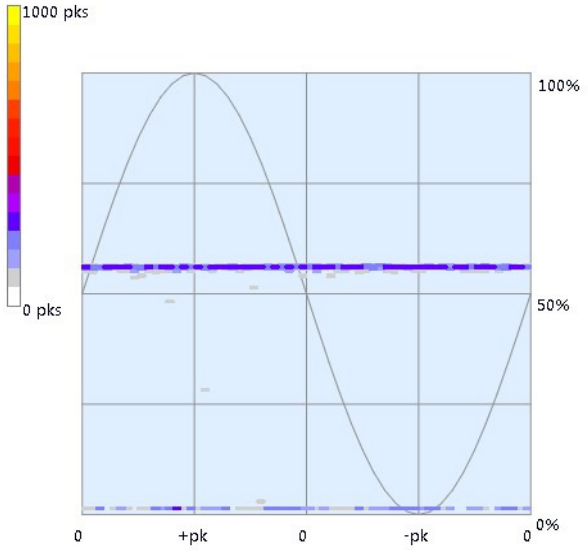

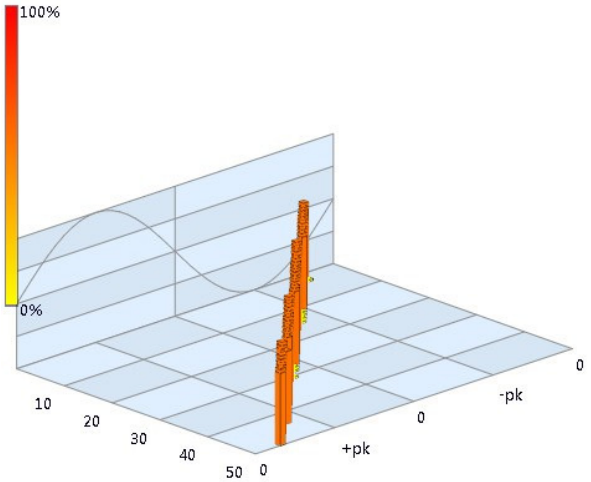

Injector Voltage 4V

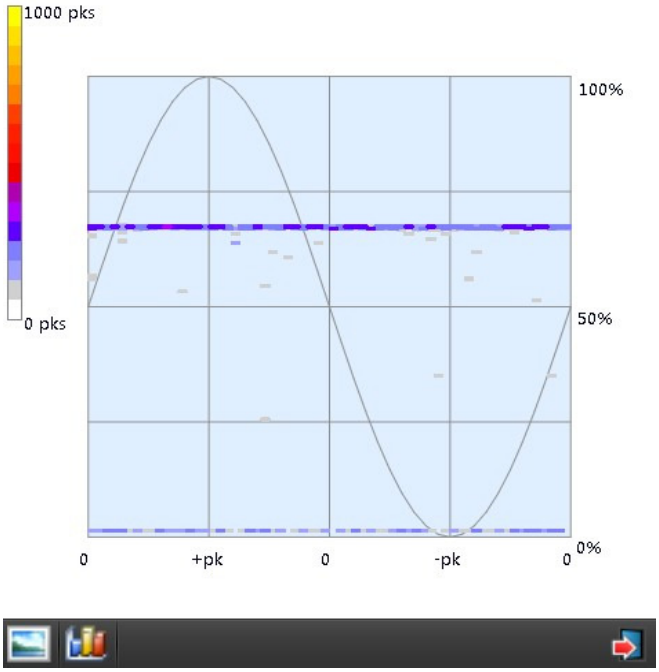

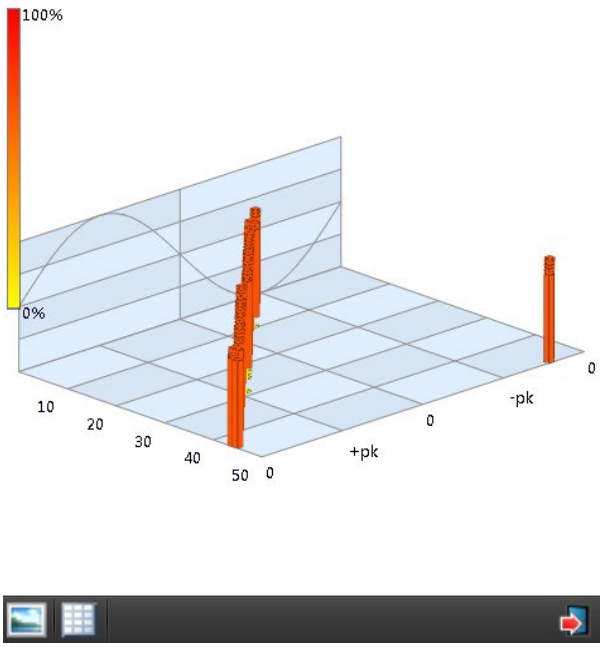

Injector Voltage 5V

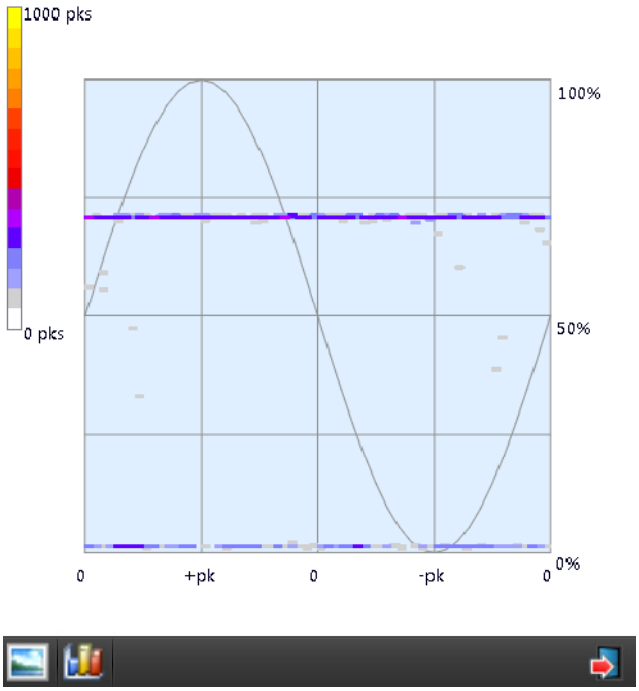

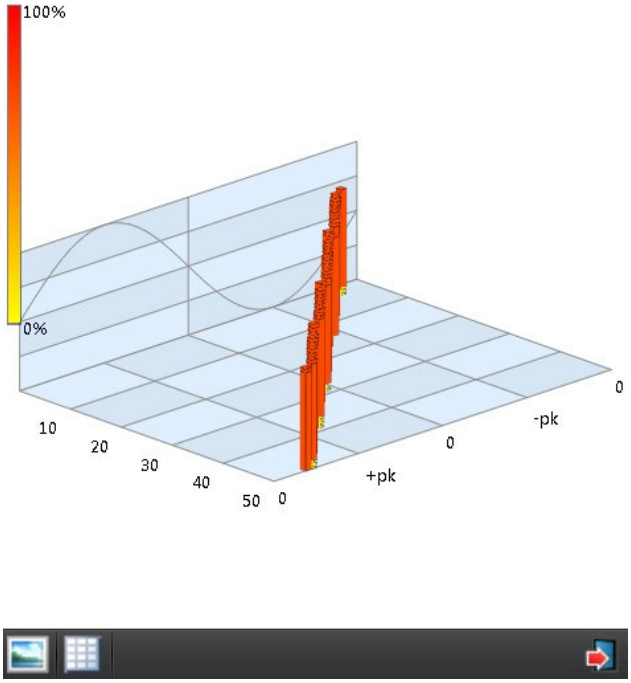

Case 3: With actual Bay arrangement - Pickup Analysis

Injector Voltage 3V

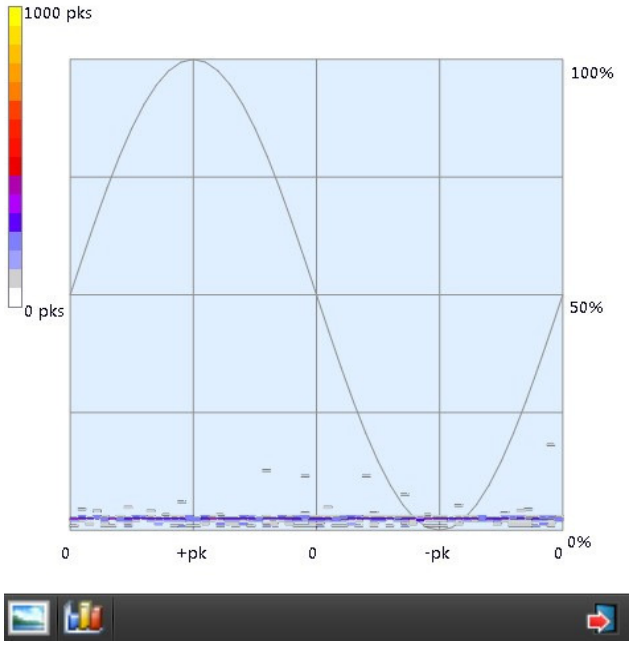

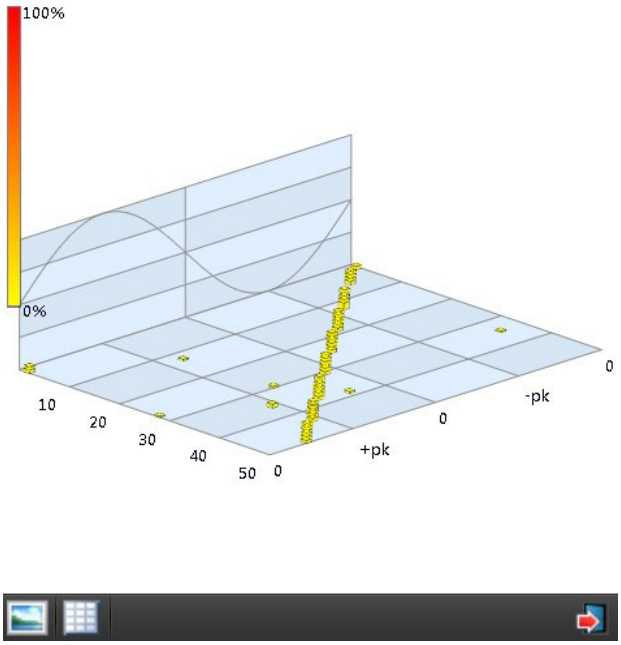

Injector Voltage 4V

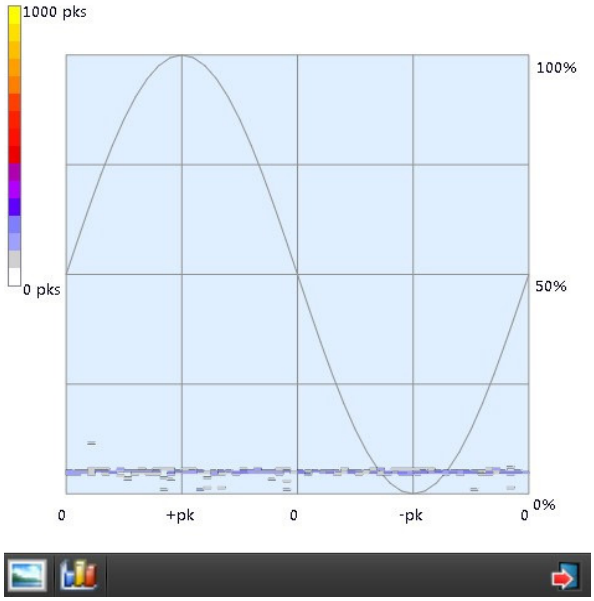

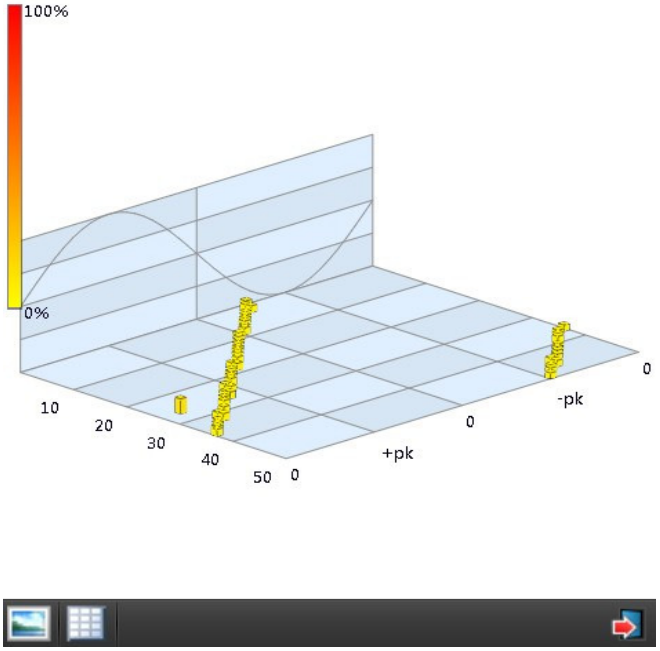

Injector Voltage 5V

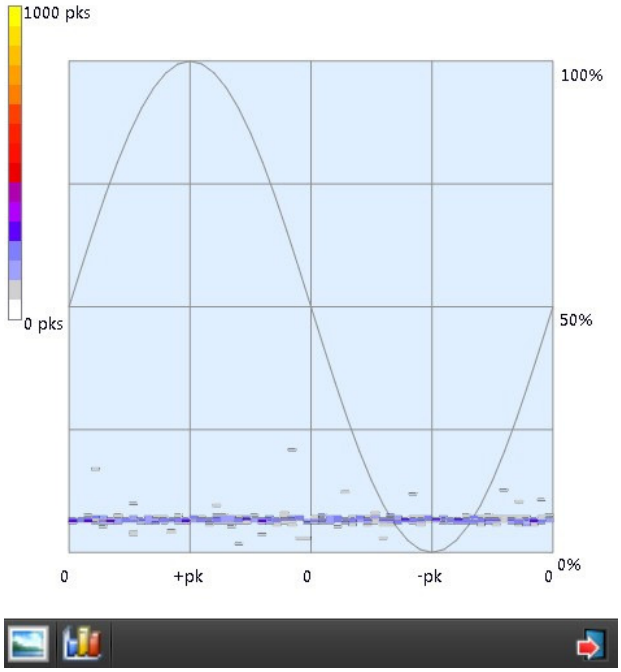

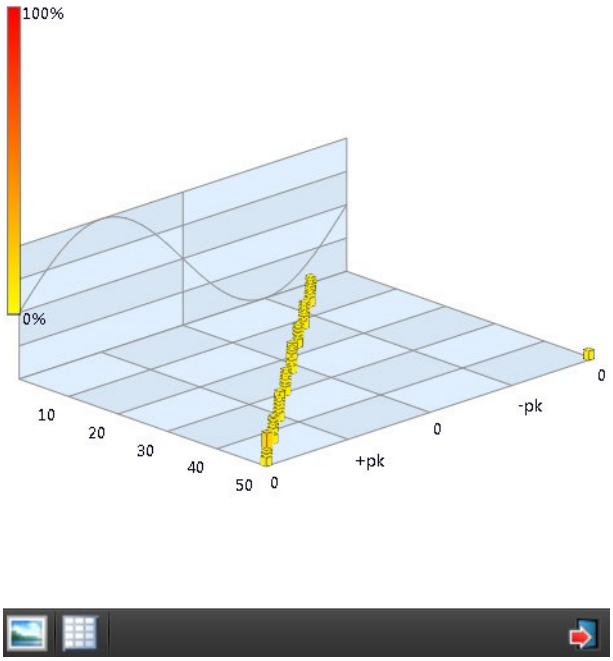

Injector Voltage 6V

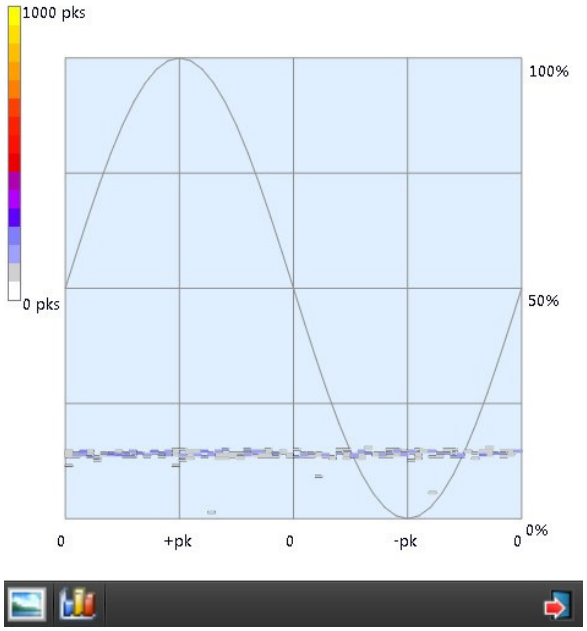

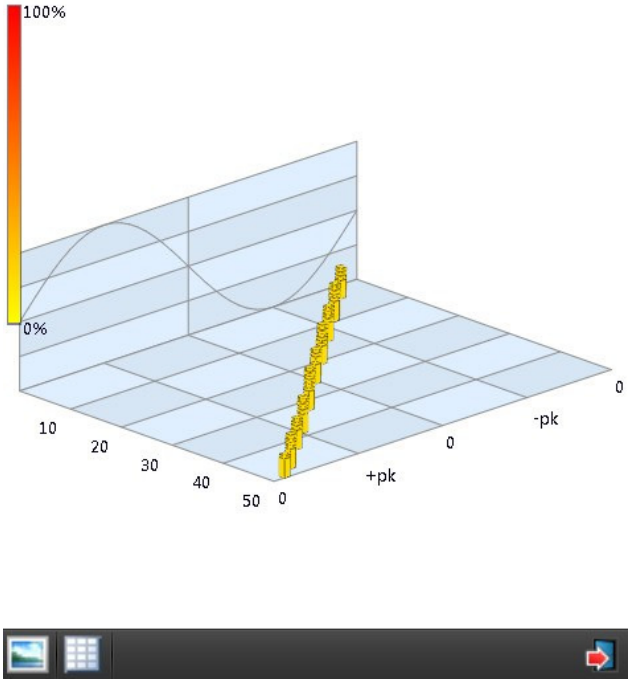

Injector Voltage 7V

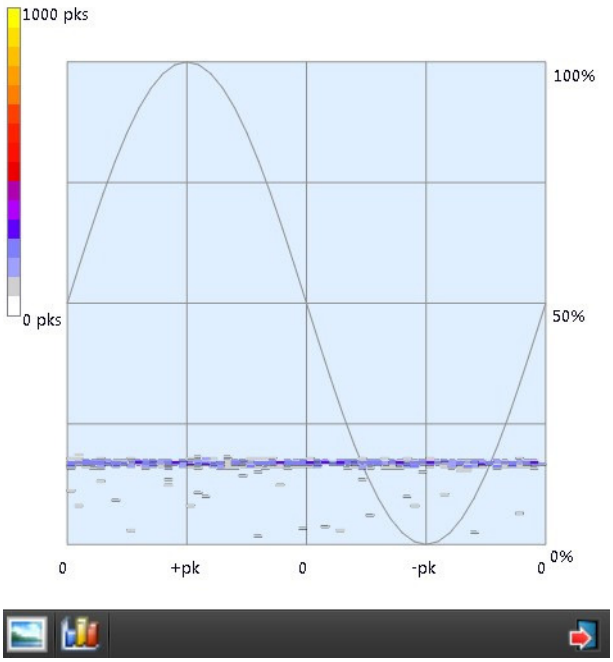

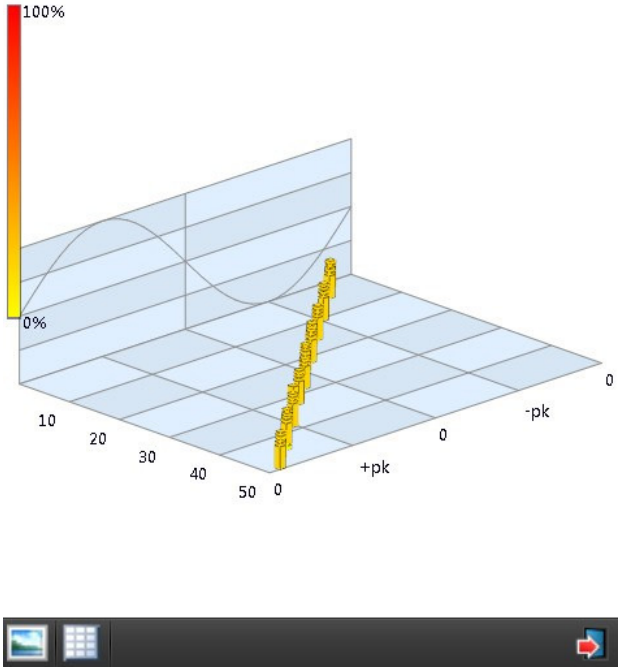

Injector Voltage 8V

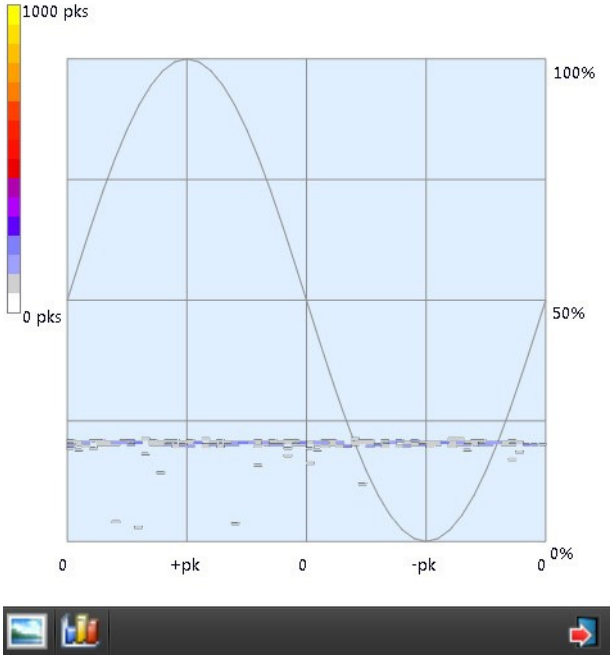

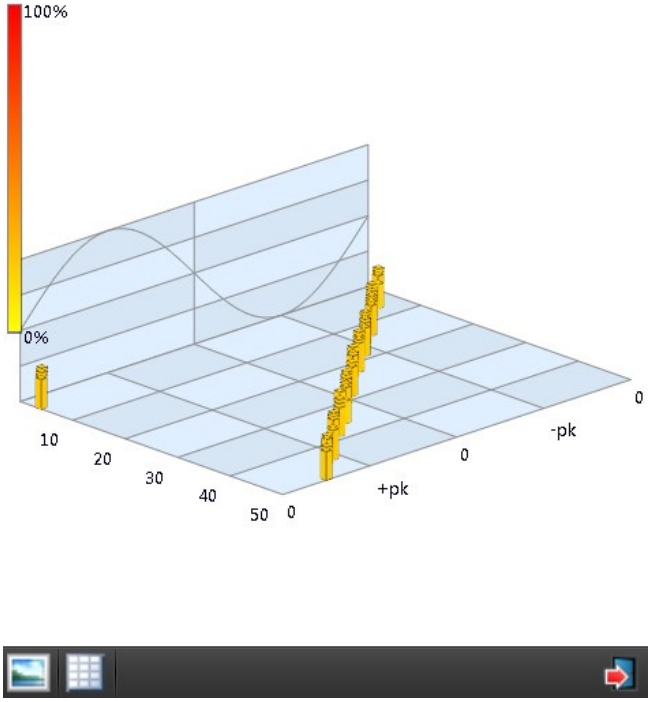

C) SENSITIVITY VERIFICATION TEST (CIGRE STEP 2)

Location of testing – on Site

1. PURPOSE

The purpose of this test is verification of the sensitivity of internal UHF sensor mounted inside the GIS, in accordance with recommendations of CIGRE verification procedure for new GIS. The procedure involves injecting a known fast-transient PD pulse train equivalent to 5pC, and being able to detect it in adjoining sensors in UHF mode. This is done in order to establish that PD activity above 5pC at any point in the GIS, can be detected verifiably.

2. TEST EQUIPMENT

a. PD signal generator

b. PD test system

c. UHF Sensors mounted in GIS

3. PROCEDURE

a) Connect the PD test system to each sensor and measure the ambient PD / noise level

b) Inject the artificial pulse signal to internal UHF sensor(X) by signal injection unit as per level defined at Stage 1 and measure the signal at adjacent internal UHF sensor(Y) by PD system.

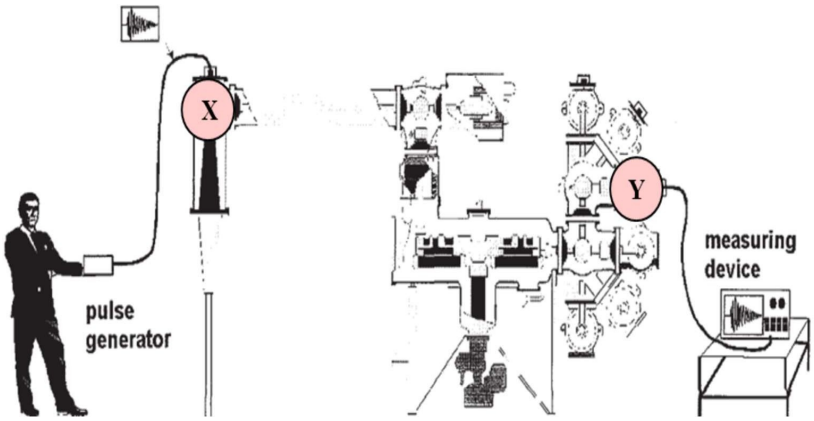

c) Follow all defined combinations of adjacent sensors, and do both side of transmit-receive

d) Check if can detect the PD pulses over and above the ambient noise level

e) Record the measured readings in dBm and capture the graphs and store the measurements

for future reference

f) Repeat the above sequence for all the sensor combinations possible

g) If PD sensitivity results are in accordance with norms, proceed for HV/PD test accordingly

Objective: Service continuity for 245kV GIS

During various activities requiring de-energization of parts of the GIS, compartments to be taken out of service comply with the service continuity requirements. These activities include:

- maintenance,
- repair,
- extension;

The loss of substation complete or partially due to maintenance, repair after failure or extension is a prime concern. The availability of a substation needs to take into account the reliability and performance of assets and the frequency and duration of outages.

As per IEC 62271-203 Cl. No. F.2, The single-line diagram reflects the necessary functions and rating needed for the system planning network. Since the single–line diagram has a major influence on GIS design, the aspects of maintenance, repair or extension and their impact on service continuity can be considered during the process of single–line diagram optimization. Depending on the specific purpose of the new substation and its strategic location in the network, the impact of outage can be different. Type of availability might be specific and different for each part of a substation. As an example, a non-restricted list of availability requirement is given below:

A) No outage permitted: This is normally only applicable for minor maintenance like visual inspections.
B) Loss of operational flexibility permitted: This means loss of busbar, loss of busbar separation or bus coupler without loss of a feeder.
C) Loss of feeders permitted: This means loss of one or more feeders.
D) Loss of complete substation: This means that network is such that load supply or power transit can be achieved temporarily without this substation.

As per IEC 62271-203 Cl. No.F.3 Impact of partitioning on service continuity For GIS and a given switching arrangement, the way in which the equipment is divided into gas compartments affect the service continuity. It is clear that, in order to de-gas a compartment, that compartment with all its components shall be isolated from the system. Occasionally, work such as a fault repair might require the removal of a gas compartment partition and more than one compartment must be de-gassed. it is prohibited to work adjacent to a gas compartment partition while it is pressurized on the other side. In such cases, the gas pressure in the adjacent compartments must be reduced.

Mitigating a major failure requires to carefully analyze the non availability as below;

- Just after the failure: Single-line diagram and redundancy are main topics which mitigate non availability
- During the repair: Accessibility, safety rules, gas partitioning, bay sequence, spares + tools + support availability, are main topics which mitigate non availability
- Repairing a major failure, for instance an internal flashover, generally requires to replace the entire compartment where the failure occurred, including all gas barriers of the defective compartment

Single line & Gas schematic diagram:

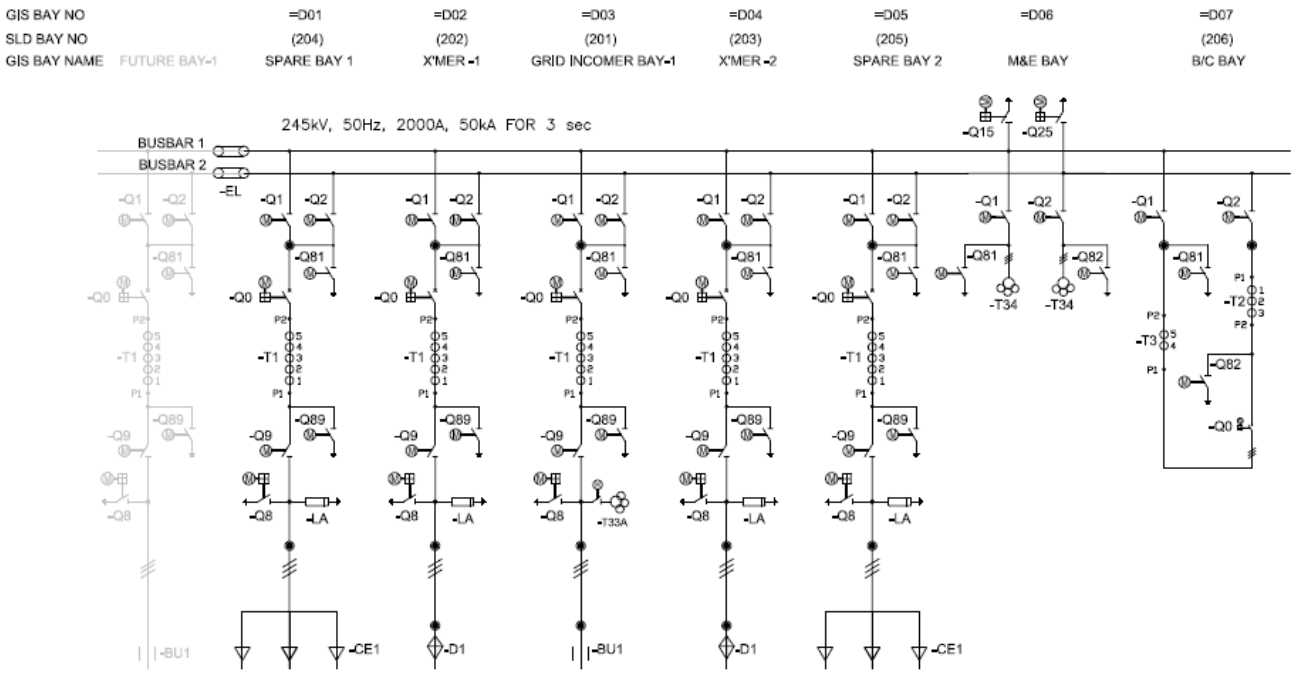

SLD

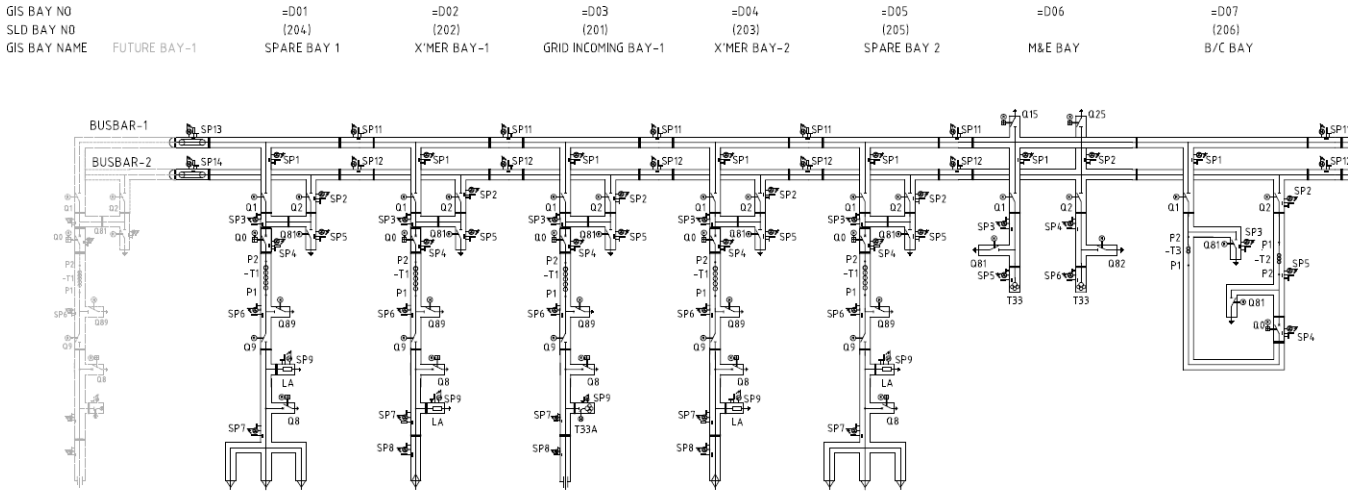

GSD

Case 1: If a fault in any of the GIS bay it is possible remove only the faulty bay without the necessity of removing the neighbouring healthy bays. All other GIS bays function normally.

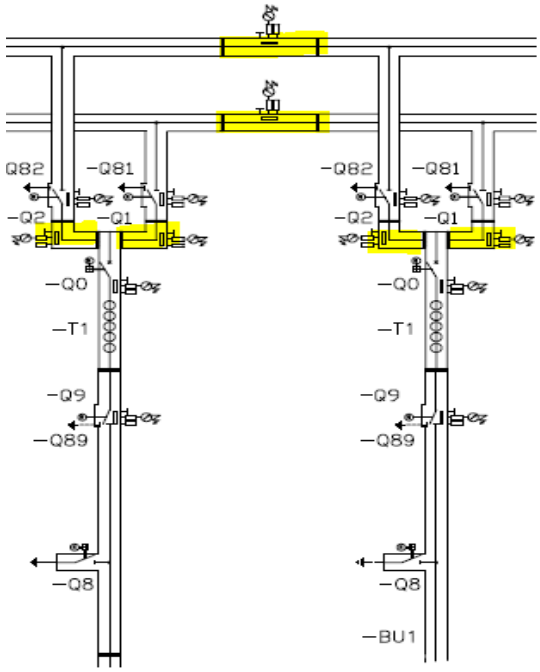

By providing Intermediate Gas Compartment provided between 2 adjacent Bays and between bus side disconnector & circuit breaker:

With the gas barriers as highlighted in figure, bus bars of individual feeders can be isolated without de-energizing the adjacent feeders.

This will facilitate maintenance of any particular feeder without de-energizing adjacent feeders.

Case 2: In case of an internal fault in any one of the Bus bar sections, it shall be possible to remove and replace the faulty bus bar without the necessity of removing the healthy, energized Bus bar and Bus bar disconnector from service.

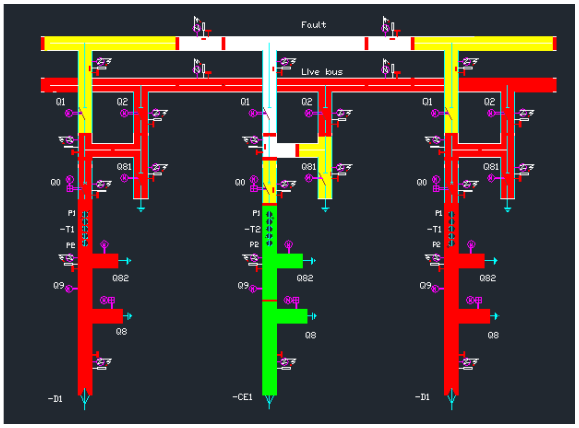

Bus 1 or Bus Disconnector is under maintenance, other busbar and undisturbed bays will remain in service.

- Healthy System (Charged)
- Healthy system (Not Charged)
- Gas pressure half
- Zero gas pressure compartment under maintenance

Bus 2 or Bus Disconnector is under maintenance, other busbar and undisturbed bays will remain in service.

- Healthy System (Charged)
- Healthy system (Not Charged)
- Gas pressure half
- Zero gas pressure compartment under maintenance

CB chamber is under maintenance/ removed, both busbar and undisturbed bays will remain in service.

- Healthy System (Charged)
- Healthy system (Not Charged)
- Gas pressure half
- Zero gas pressure compartment under maintenance

Case 3 : Bus VT or Line VT

If there is any undue event in Bus VT, we can shut down that particular Bus and transfer the load to other healthy bus so that entire Substation bays will remain in service.

If there is any undue event in Line VT, we can shut down that particular Bay/feeder other healthy bus so that entire Substation bays will remain in service.

Case 4 :

For future extension bays isolating link is provided at Bus termination, with the use of it we can have extension of future bays with smaller gas handling and shut down of Bus 1 & Bus 2 for small duration of Bus one followed by other.

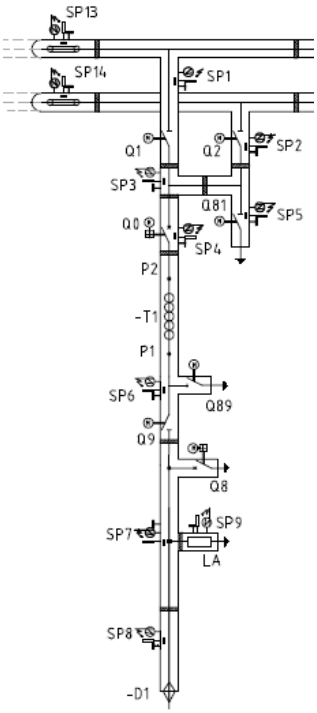

Case 5:

In case of coupler bay, in undue event in or maintenance in CB, both bus can remain in live condition, with DS of respective bus in open condition. This is with the assumption that both bus have independent incoming/outgoing feeders irrespective of CB condition of coupler bay and maintaining both bus in live condition.

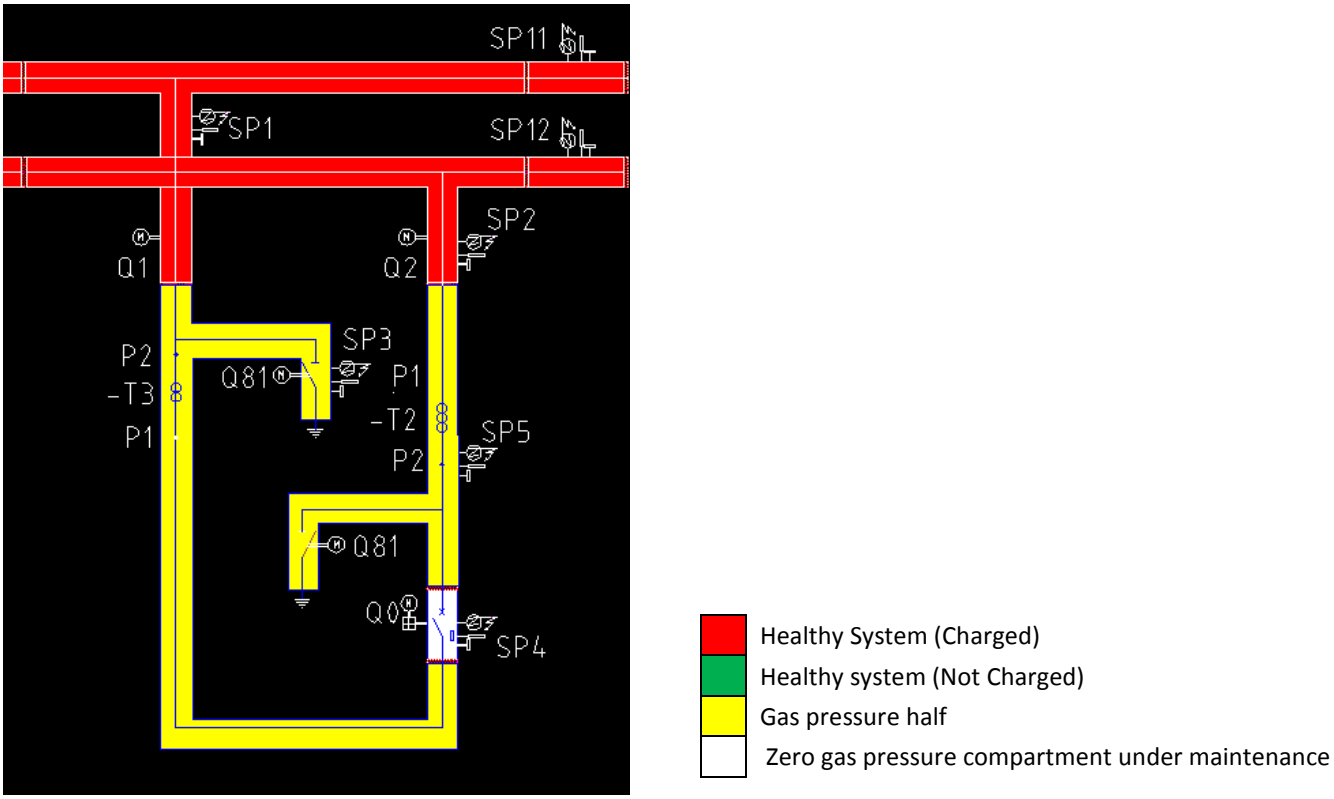

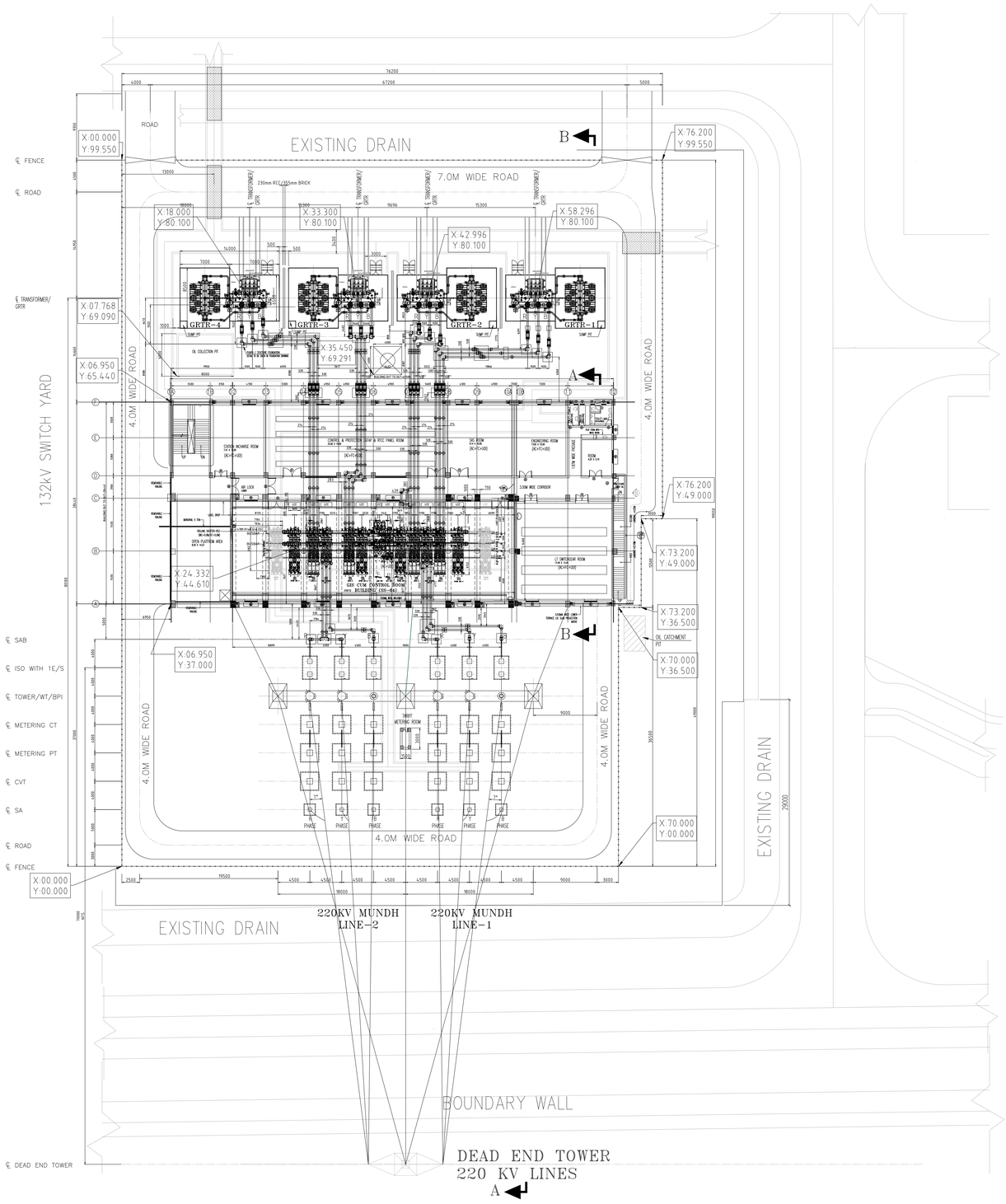

IMPORTANT NOTE:-

A) DATA FOR OVERHEAD EOT CRANE
MINIMUM LOAD: 8KN (8 TONNE)
(*EOT CRANE SHALL HAVE INCHING FACILITY)
MINIMUM HEIGHT OF THE HOOK: AS PER SECTIONAL DRAWINGS

B) CIVIL CONTRACTOR SHALL PROVIDE WICKED DOOR IN GIS ROOM AT SUITABLE LOCATION.

C) CUSTOMER TO CONFIRM R,Y,B PHASE SEQUENCE ON SF6 TO OIL BUSHING AND SF6 TO AIR BUSHING SIDE.
ONCE PHASE SEQUENCE CONFIRMED CAN NOT BE ALTERED AT LATER DATE.

D) EQUIPMENTS OTHER THAN 220kV GIS ARE SHOWN FOR REFERENCE ONLY: (i.e. NOT IN SWG-GIS SCOPE)

E) ALL DIMENSIONS ARE IN MILLIMETER UNLESS OTHERWISE NOTED.

DESIGNATION	ITEM DESCRIPTION (FOR 220kV)
-Q0	CIRCUIT BREAKER
-Q1,-Q2	DISCONNECTOR (BUSBAR SIDE) THREE POLE, MOTOR OPERATED.
-Q9	DISCONNECTOR (LINE SIDE) THREE POLE, MOTOR OPERATED.
-Q81/Q82 -Q89	MAINTENANCE EARTHING SWITCH
-Q8,-Q15, -Q25	HIGH SPEED EARTH SWITCH
-T1,T2	CURRENT TRANSFORMER
-T33,T33A	INDUCTIVE VOLTAGE TRANSFORMER
-BU1	SF6 TO AIR BUSHING (Enclosure Only)
-D1	SF6 TO OIL BUSHING (Enclosure Only)
-LCC	LOCAL CONTROL CUBICLE
-BD	BUSDUCT

REFERANCE DRAWINGS OF M/s BHEL:

SR. NO.	DESCRIPTION	DRAWING NUMBER	REVISION
1	220/33KV SWITCHYARD- LAYOUT PLAN & SECTION DT. 27.03.2021	TB-411-316-011	07
2	ARCH DRAWING-GROUND FLOOR PLAN-IOCL-PANIPAT REFINERY] DT. 10.03.2021	TB-1-411-607-626-1 TB-1-411-607-626-2 TB-1-411-607-626-3	1

REFERANCE DRAWINGS OF M/s CGPISL:

SR. NO.	DESCRIPTION	DRAWING NUMBER	REVISION
1	SINGLE LINE DIAGRAM	20606D-101	R3
2	SCHEMATIC FOR GAS MONITORING SYSTEM	20606D-103	R3

NOTES:-

1. OIL COLLECTION PIT AND LLM POSITION SHIFTED CONSIDERING BUSDUCT ROUTING. M/S BHEL NEEDS TO TAKE CARE DURING CIVIL WORK.
2. COLUMN F07 SHALL BE FLUSHED AT PARAPET WALL TO AVOID FOULING OF BUSDUCT, R-PHASE, X'MER D09 BAY.
3. EMBEDDED H-BEAM POSITION WILL BE SHOWN IN CIVIL DRAWING ONCE LAYOUT IS APPROVED.

TATA CONSULTING ENGINEERS LIMITED
VENDOR DOCUMENT REVIEW STATUS

- ☑ A. Document approved as submitted; proceed with fabrication/construction.
- ☐ B. Document approved subject to comments noted; proceed with fabrication/construction considering our comments.
- ☐ C. Our comments are noted on this marked up print.
- ☐ D. Our comments are noted in the memo attached to the forwarding transmittal Letter No. ..... Dated .....
- ☐ E. Correct original of this document to reflect our comments and resubmit for approval.
- ☐ F. Correct original of this document to reflect our comments and resubmitted for records.
- ☐ G. Document of this category are for information only and not for approval. Information furnished on the document is noted.
- ☐ H. Document reviewed against our previous comments and other revisions highlighted and identified by the vendor.
- ☐ I. Document returned without review.

Approval conveyed herein neither relieves Vendor/Contractor of his contractual obligations and his responsibilities for correctness of dimensions, materials of construction, weights, quantities, design details, assembly fits, system/performance requirements and conformity of supplies with Indian Statutory Laws as may be applicable, nor does it limit the Purchaser's rights under the contract.

Reviewed by AKN Date 20-07-2021

PROJECT :
LSTK JOB FOR ISBL WORK OF 220kV GRID POWER IMPORT AT
INDIAN OIL - PANIPAT REFINERY
LOA NO. RPRC182491/26286965 DTD.24.01.2020

OWNER : INDIAN OIL CORPORATION LIMITED

CONSULTANT : TATA CONSULTING ENGINEERS LIMITED

EPC CONTRACTOR : भारत हेवी इलेक्ट्रिकल्स लिमिटेड
ट्रांसमिशन परियोजना विभाग
BHARAT HEAVY ELECTRICALS LIMITED
TRANSMISSION PROJECTS DIVISION

TITLE / DESCRIPTION :-
220KV GIS- Layout Plan & Section

FOR APPROVAL

DRAWING NO: TB-411-316-079-03

NO	REVISION	NAME	DATE
5			
4			
3	UPDATED AS PER CUSTOMER COMMENT.	MBK	09.07.21
2	UPDATED AS PER CLIENT EMAIL DATED 04.06.2021	MBK	08.07.21
1	UPDATED AS PER CLIENT EMAIL DATED 16.04.2021	PAG	30.04.2021

DRN MBK
CHD KSP
APPD KSP
SCALE: N.T.S.
DATE:03.04.2021

TITLE: LAYOUT DRAWING
FOR: 245kV
GIS TYPE: GAI3S
ALL DIMENSIONS ARE IN mm

THIRD ANGLE PROJECTION

CG POWER AND INDUSTRIAL SOLUTIONS LIMITED.
GIS DIVISION
AMBAD, NASHIK

DRG.NO: 20606D_103 1 / 1 R03

DRG.NO.: 20606D_103 1 /2 R1

IF IN DOUBT ASK!

ALL INFORMATION CONTAINED IN THIS DOCUMENT IS CONFIDENTIAL & SHOULD NOT BE USED WITHOUT PRIOR CONSENT OF CG POWER AND INDUSTRIAL SOLUTIONS LIMITED.

"SECTION A–A"

THIS SECTION IS APPLICABLE FOR FOLLOWING BAYS:
=D02, =D04, =D09, =D11. (TRANSFORMER BAYS)

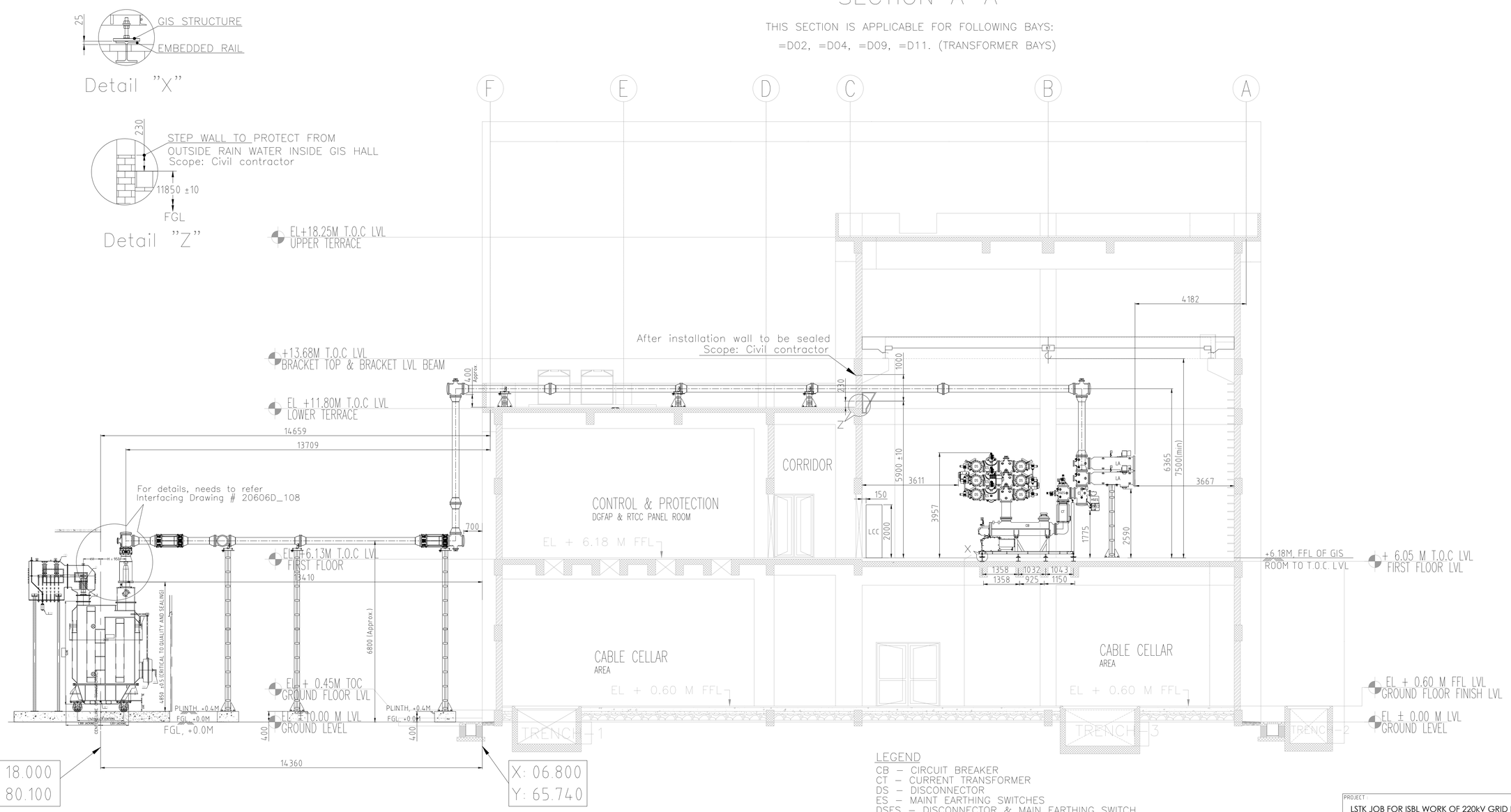

LEGEND

CB – CIRCUIT BREAKER
CT – CURRENT TRANSFORMER
DS – DISCONNECTOR
ES – MAINT EARTHING SWITCHES
DSES – DISCONNECTOR & MAIN EARTHING SWITCH
LCC – LOCAL CONTROL CUBICLE
CE – CABLE END TERMINATION
HSES – HIGH SPEED EARTHING SWITCH
VT – VOLTAGE TRANSFORMER
LA – LIGHTNING ARRESTER
BU1 – SF6 TO AIR BUSHING

NOTES:
1) M/s BHEL SHALL MAINTAIN ALL DIMENSIONS WITHIN THE GIVEN TOLERANCE LIMITS.
2) DEVIATION IF ANY, SHALL BE BROUGHT OUT TO M/s CGPISL NOTICE EXPLICITLY!.
3) BUSDCUT CUTOUT POSITION AND DIMENSIONS IS PART OF CIVIL DRAWING.

PROJECT:
LSTK JOB FOR ISBL WORK OF 220kV GRID POWER IMPORT AT
INDIAN OIL - PANIPAT REFINERY
LOA NO. RPRC182491/26286965 DTD.24.01.2020

OWNER: INDIAN OIL CORPORATION LIMITED

CONSULTANT: TATA CONSULTING ENGINEERS LIMITED

EPC CONTRACTOR: भारत हेवी इलेक्ट्रिकल्स लिमिटेड
ट्रांसमिशन परियोजना विभाग
BHARAT HEAVY ELECTRICALS LIMITED
TRANSMISSION PROJECTS DIVISION

BHEL DRAWING NUMBER: TB-411-316-079-03

NO	REVISION	NAME	DATE
5			
4			
3	UPDATED AS PER CUSTOMER COMMENT.	MBK	09.07.21
2	UPDATED AS PER CLIENT COMMENT.	MBK	09.07.2021
1	UPDATED AS PER CLIENT EMAIL DT 25.05.2021	MBK	30.05.2021

DRN: MBK
CHD: KSP
APPD: KSP
SCALE: N.T.S.
DATE: 28.05.2021

TITLE: 220KV GIS– Layout Plan & Section
FOR: 245kV
GIS TYPE: GAI3S
ALL DIMENSIONS ARE IN mm

THIRD ANGLE PROJECTION

CG POWER AND INDUSTRIAL SOLUTIONS LIMITED.
GIS DIVISION
AMBAD, NASHIK

DRG.NO: 20606D_105 | 1 /5 | R03

DRG.NO.: 20606D_105 | 1 /5 | R2

IF IN DOUBT ASK!

ALL INFORMATION CONTAINED IN THIS DOCUMENT IS CONFIDENTIAL & SHOULD NOT BE USED WITHOUT PRIOR CONSENT OF CG POWER AND INDUSTRIAL SOLUTIONS LIMITED.

DRG.NO.: 20606D_105 | 2 /5 | R2

"SECTION B–B"

THIS SECTION IS APPLICABLE FOR FOLLOWING BAYS:
=D01, =D05, =D08, =D12. (SPARE BAYS)

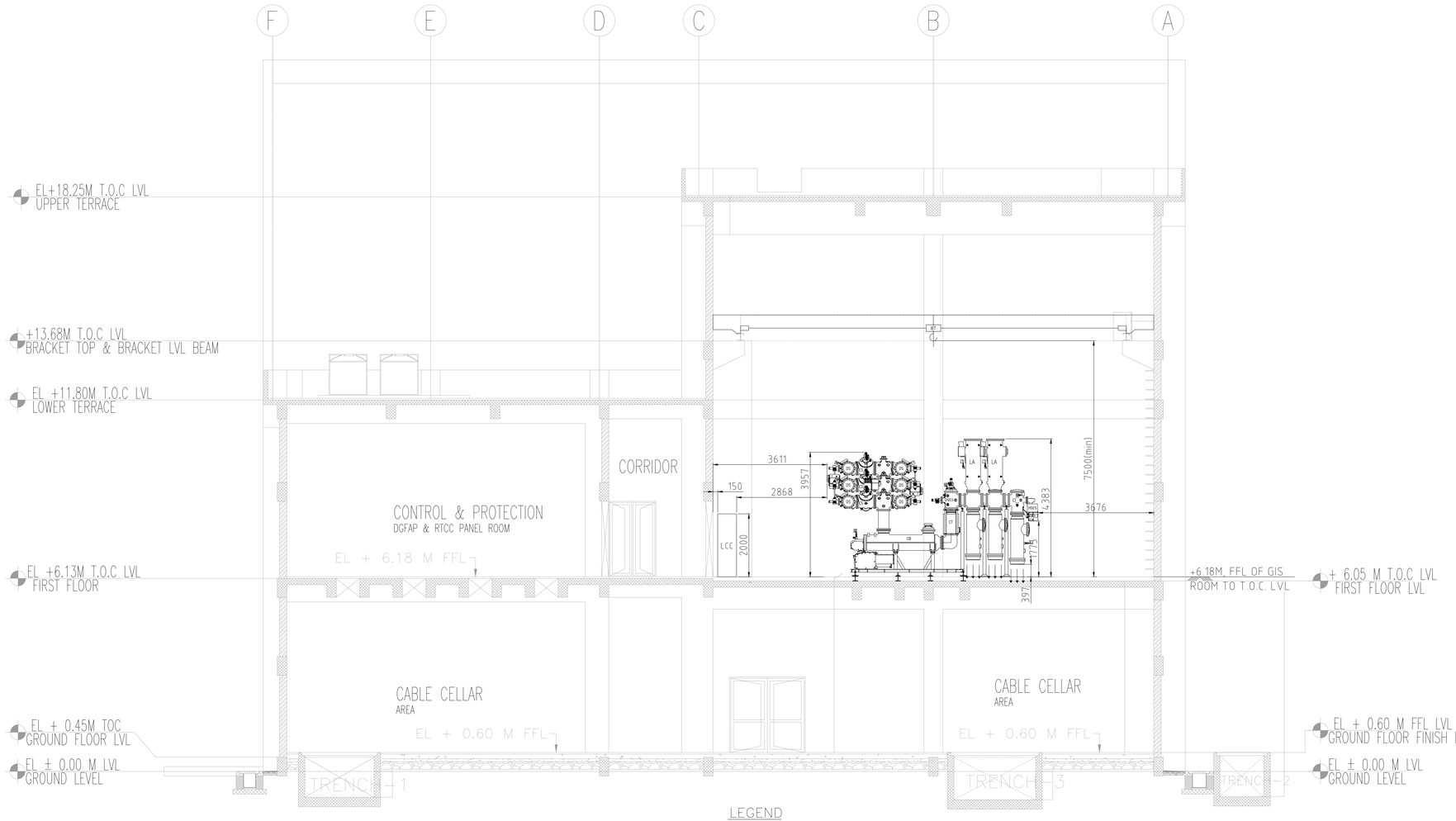

LEGEND

CB – CIRCUIT BREAKER
CT – CURRENT TRANSFORMER
DS – DISCONNECTOR
ES – MAINT EARTHING SWITCHES
DSES – DISCONNECTOR & MAIN EARTHING SWITCH
LCC – LOCAL CONTROL CUBICLE
CE – CABLE END TERMINATION
HSES – HIGH SPEED EARTHING SWITCH
VT – VOLTAGE TRANSFORMER
LA – LIGHTNING ARRESTER
BU1 – SF6 TO AIR BUSHING

NOTES:
1) M/s BHEL SHALL MAINTAIN ALL DIMENSIONS WITHIN THE GIVEN TOLERANCE LIMITS.
2) DEVIATION IF ANY, SHALL BE BROUGHT OUT TO M/s CGPISL NOTICE EXPLICITLY!.
3) BUSDCUT CUTOUT POSITION AND DIMENSIONS IS PART OF CIVIL DRAWING.

PROJECT:
LSTK JOB FOR ISBL WORK OF 220kV GRID POWER IMPORT AT
INDIAN OIL - PANIPAT REFINERY
LOA NO. RPRC182491/26286965 DTD.24.01.2020

OWNER: INDIAN OIL CORPORATION LIMITED

CONSULTANT: TATA CONSULTING ENGINEERS LIMITED

EPC CONTRACTOR: भारत हेवी इलेक्ट्रिकल्स लिमिटेड
ट्रांसमिशन प्रोजेक्ट्स विभाग
BHARAT HEAVY ELECTRICALS LIMITED
TRANSMISSION PROJECTS DIVISION

BHEL DRAWING NUMBER: TB-411-316-079-03

NO	REVISION	NAME	DATE
5			
4			
3	UPDATED AS PER CUSTOMER COMMENT.	MBK	09.07.21
2	UPDATED AS PER CLIENT COMMENT.	MBK	09.07.2021
1	UPDATED AS PER CLIENT EMAIL DT 25.05.2021	MBK	30.05.2021

DRN: MBK
CHD: KSP
APPD: KSP
SCALE: N.T.S.
DATE:28.05.2021

TITLE: 220KV GIS– Layout Plan & Section
FOR: 245kV
GIS TYPE: GAI3S

THIRD ANGLE PROJECTION

CG POWER AND INDUSTRIAL SOLUTIONS LIMITED.
GIS DIVISION
AMBAD, NASHIK

ALL DIMENSIONS ARE IN mm | DRG.NO: 20606D_105 | 2 /5 | R03

IF IN DOUBT ASK!

ALL INFORMATION CONTAINED IN THIS DOCUMENT IS CONFIDENTIAL & SHOULD NOT BE USED WITHOUT PRIOR CONSENT OF CG POWER AND INDUSTRIAL SOLUTIONS LIMITED.

DRG.NO.: 20606D_105 | 3 /5 | R0

"SECTION C–C"

THIS SECTION IS APPLICABLE FOR FOLLOWING BAYS:
=D03, =D10. (I/C BAYS)

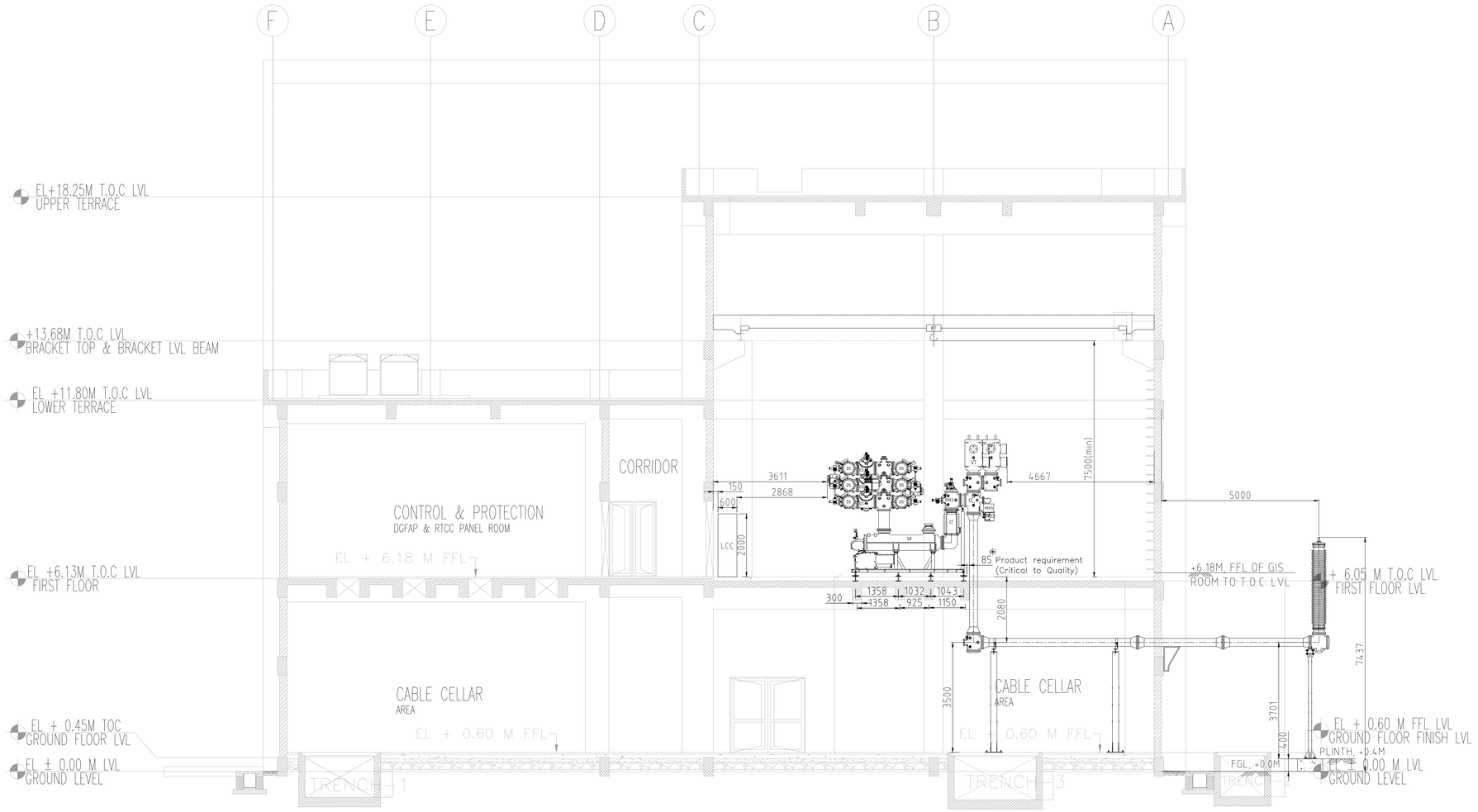

CB – CIRCUIT BREAKER
CT – CURRENT TRANSFORMER
DS – DISCONNECTOR
ES – MAINT EARTHING SWITCHES
DSES – DISCONNECTOR & MAIN EARTHING SWITCH
LCC – LOCAL CONTROL CUBICLE
CE – CABLE END TERMINATION
HSES – HIGH SPEED EARTHING SWITCH
VT – VOLTAGE TRANSFORMER
LA – LIGHTNING ARRESTER
BU1 – SF6 TO AIR BUSHING

NOTES:
1) M/s BHEL SHALL MAINTAIN ALL DIMENSIONS WITHIN THE GIVEN TOLERANCE LIMITS.
2) DEVIATION IF ANY, SHALL BE BROUGHT OUT TO M/s CGPISL NOTICE EXPLICITLY!.
3) BUSDCUT CUTOUT POSITION AND DIMENSIONS IS PART OF CIVIL DRAWING.

PROJECT:
LSTK JOB FOR ISBL WORK OF 220kV GRID POWER IMPORT AT
INDIAN OIL - PANIPAT REFINERY
LOA NO. RPRC182491/26286965 DTD.24.01.2020

OWNER:
INDIAN OIL CORPORATION LIMITED

CONSULTANT:
TATA CONSULTING ENGINEERS LIMITED

EPC CONTRACTOR:
भारत हेवी इलेक्ट्रिकल्स लिमिटेड
ट्रांसमिशन परियोजना विभाग
BHARAT HEAVY ELECTRICALS LIMITED
TRANSMISSION PROJECTS DIVISION

BHEL DRAWING NUMBER: TB-411-316-079-03

NO	REVISION	NAME	DATE
5			
4			
3	UPDATED AS PER CUSTOMER COMMENT.	MBK	09.07.21
2	UPDATED AS PER CLIENT COMMENT.	MBK	09.07.2021
1	UPDATED AS PER CLIENT EMAIL DT 25.05.2021	MBK	30.05.2021

DRN MBK
CHD KSP
APPD KSP
SCALE: N.T.S.
DATE:28.05.2021

TITLE: 220KV GIS– Layout Plan & Section
FOR: 245kV
GIS TYPE: GAI3S
ALL DIMENSIONS ARE IN mm

THIRD ANGLE PROJECTION

CG POWER AND INDUSTRIAL SOLUTIONS LIMITED.
GIS DIVISION
AMBAD, NASHIK

DRG.NO: 20606D_105 | 3 /5 | R03

IF IN DOUBT ASK!

ALL INFORMATION CONTAINED IN THIS DOCUMENT IS CONFIDENTIAL & SHOULD NOT BE USED WITHOUT PRIOR CONSENT OF CG POWER AND INDUSTRIAL SOLUTIONS LIMITED.

"SECTION D–D"

THIS SECTION IS APPLICABLE FOR FOLLOWING BAYS:
=D07. (BUSCOUPLER BAY)

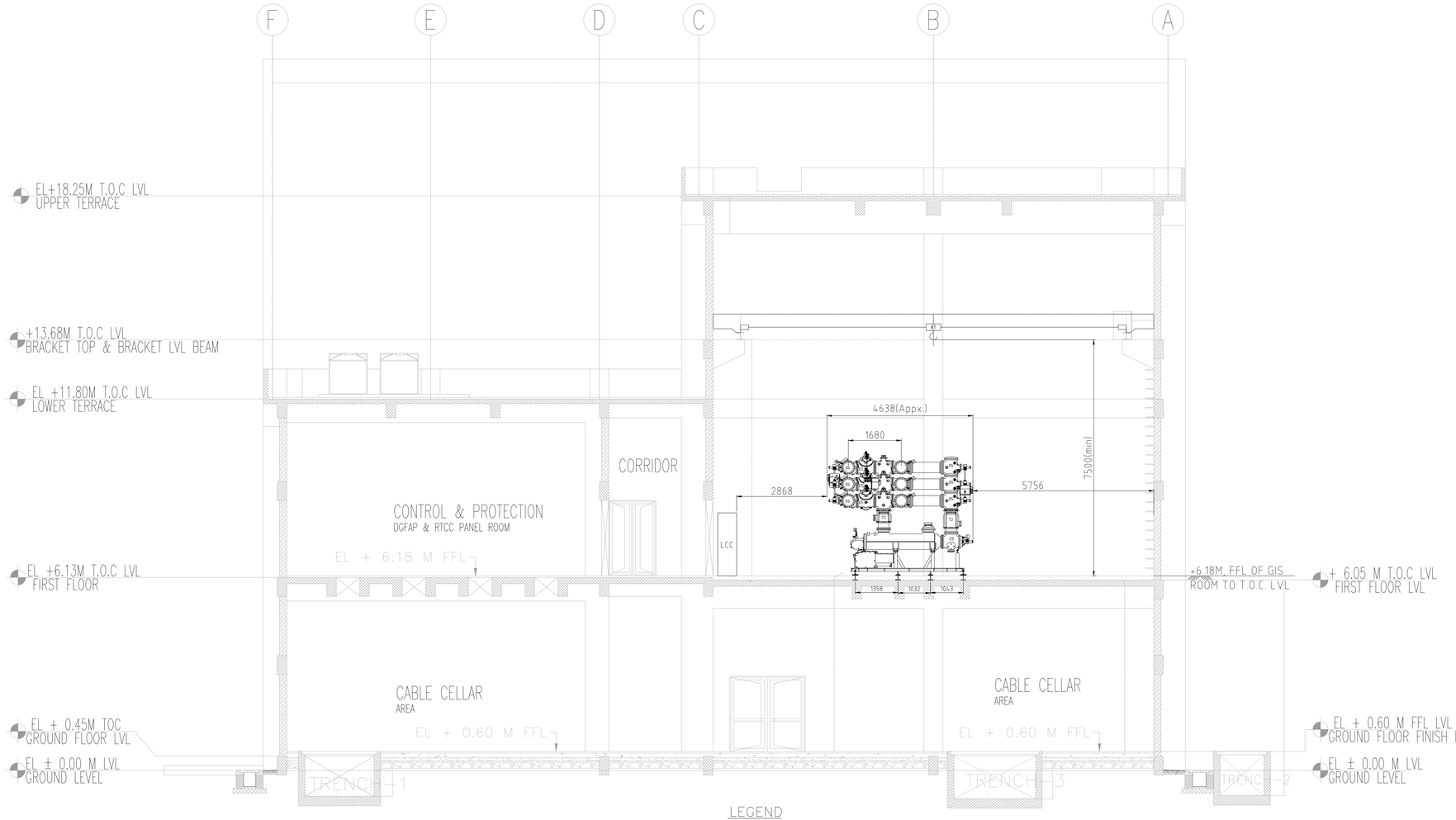

LEGEND

CB – CIRCUIT BREAKER
CT – CURRENT TRANSFORMER
DS – DISCONNECTOR
ES – MAINT EARTHING SWITCHES
DSES – DISCONNECTOR & MAIN EARTHING SWITCH
LCC – LOCAL CONTROL CUBICLE
CE – CABLE END TERMINATION
HSES – HIGH SPEED EARTHING SWITCH
VT – VOLTAGE TRANSFORMER
LA – LIGHTNING ARRESTER
BU1 – SF6 TO AIR BUSHING

NOTES:
1) M/s BHEL SHALL MAINTAIN ALL DIMENSIONS WITHIN THE GIVEN TOLERANCE LIMITS.
2) DEVIATION IF ANY, SHALL BE BROUGHT OUT TO M/s CGPISL NOTICE EXPLICITLY!.
3) BUSDCUT CUTOUT POSITION AND DIMENSIONS IS PART OF CIVIL DRAWING.

PROJECT:
LSTK JOB FOR ISBL WORK OF 220kV GRID POWER IMPORT AT
INDIAN OIL - PANIPAT REFINERY
LOA NO. RPRC182491/26286965 DTD.24.01.2020

OWNER: INDIAN OIL CORPORATION LIMITED

CONSULTANT: TATA CONSULTING ENGINEERS LIMITED

EPC CONTRACTOR: भारत हेवी इलेक्ट्रिकल्स लिमिटेड ट्रांसमिशन परियोजना विभाग
BHARAT HEAVY ELECTRICALS LIMITED
TRANSMISSION PROJECTS DIVISION

BHEL DRAWING NUMBER: TB-411-316-079-03

NO	REVISION	NAME	DATE
5			
4			
3	UPDATED AS PER CUSTOMER COMMENT.	MBK	09.07.21
2	UPDATED AS PER CLIENT COMMENT.	MBK	09.07.2021
1	UPDATED AS PER CLIENT EMAIL DT 25.05.2021	MBK	30.05.2021

DRN: MBK
CHD: KSP
APPD: KSP
SCALE: N.T.S.
DATE: 28.05.2021

TITLE: 220KV GIS– Layout Plan & Section
FOR: 245kV
GIS TYPE: GAI3S
ALL DIMENSIONS ARE IN mm

THIRD ANGLE PROJECTION

CG POWER AND INDUSTRIAL SOLUTIONS LIMITED.
GIS DIVISION
AMBAD, NASHIK

DRG.NO: 20606D_105 | 4 /5 | R03

ALL INFORMATION CONTAINED IN THIS DOCUMENT IS CONFIDENTIAL & SHOULD NOT BE USED WITHOUT PRIOR CONSENT OF CG POWER AND INDUSTRIAL SOLUTIONS LIMITED.

IF IN DOUBT ASK!

DRG.NO.: 20606D_105 | 4 /5 | R2

"SECTION E–E"

THIS SECTION IS APPLICABLE FOR FOLLOWING BAYS:
=D06. (MEASUREMENT & EARTHING BAY)

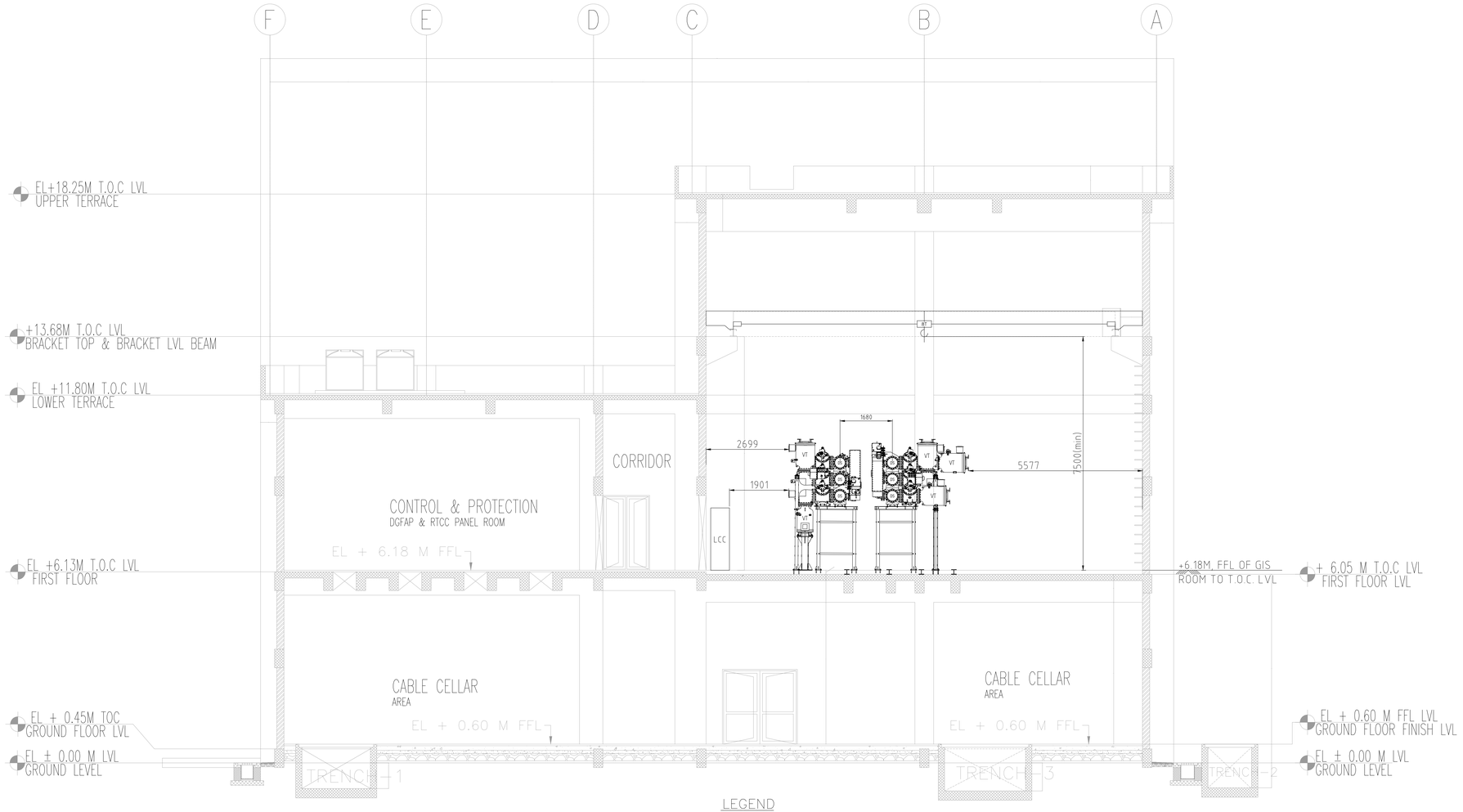

LEGEND

CB – CIRCUIT BREAKER
CT – CURRENT TRANSFORMER
DS – DISCONNECTOR
ES – MAINT EARTHING SWITCHES
DSES – DISCONNECTOR & MAIN EARTHING SWITCH
LCC – LOCAL CONTROL CUBICLE
CE – CABLE END TERMINATION
HSES – HIGH SPEED EARTHING SWITCH
VT – VOLTAGE TRANSFORMER
LA – LIGHTNING ARRESTER
BU1 – SF6 TO AIR BUSHING

NOTES:

1) M/s BHEL SHALL MAINTAIN ALL DIMENSIONS WITHIN THE GIVEN TOLERANCE LIMITS.
2) DEVIATION IF ANY, SHALL BE BROUGHT OUT TO M/s CGPISL NOTICE EXPLICITLY!.
3) BUSDCUT CUTOUT POSITION AND DIMENSIONS IS PART OF CIVIL DRAWING.

PROJECT :
LSTK JOB FOR ISBL WORK OF 220kV GRID POWER IMPORT AT
INDIAN OIL - PANIPAT REFINERY
LOA NO. RPRC182491/26286965 DTD.24.01.2020

OWNER :
INDIAN OIL CORPORATION LIMITED

CONSULTANT :
TATA CONSULTING ENGINEERS LIMITED

EPC CONTRACTOR :
भारत हेवी इलेक्ट्रिकल्स लिमिटेड
ट्रांसमिशन परियोजना विभाग
BHARAT HEAVY ELECTRICALS LIMITED
TRANSMISSION PROJECTS DIVISION

BHEL DRAWING NUMBER: TB-411-316-079-03

NO	REVISION	NAME	DATE
5			
4			
3	UPDATED AS PER CUSTOMER COMMENT.	MBK	09.07.21
2	UPDATED AS PER CLIENT COMMENT.	MBK	09.07.2021
1	UPDATED AS PER CLIENT EMAIL DT 25.05.2021	MBK	30.05.2021

DRN MBK
CHD KSP
APPD KSP
SCALE: N.T.S.
DATE:28.05.2021

TITLE: 220KV GIS– Layout Plan & Section
FOR: 245kV
GIS TYPE: GAI3S
ALL DIMENSIONS ARE IN mm

THIRD ANGLE PROJECTION

CG POWER AND INDUSTRIAL SOLUTIONS LIMITED.
GIS DIVISION
AMBAD, NASHIK

DRG.NO: 20606D_105 | 5 /5 | R03

DRG.NO.: 20606D_105 5 /5 R2

IF IN DOUBT ASK!

ALL INFORMATION CONTAINED IN THIS DOCUMENT IS CONFIDENTIAL & SHOULD NOT BE USED WITHOUT PRIOR CONSENT OF CG POWER AND INDUSTRIAL SOLUTIONS LIMITED.

COMMENTS RESOLUTION SHEET for

DRAWING / DOCUMENT TITLE: 220KV GIS- Layout Plan & Section
DOCUMENT NUMBER: TB-411-316-079-03
REVISION NO: 02

Sl. No.	Drawing/ Document Reference Details	REV01			REV02		
		Consultant/ TCE Comment (s)/ Observation(s) dtd. 16.04.2021	Customer/ IOCL Comment (s)/ Observation(s) dtd. dtd.16.04.2021	Resolution(s)/ Clarification(s) by CGPISL dtd.28.05.2021	Consultant/ TCE Comment (s)/ Observation(s) dtd. 30.05.2021 & 04.06.2021	Customer/ IOCL Comment (s)/ Observation(s) dtd. dtd.16.04.2021	Resolution(s)/ Clarification(s) by CGPISL dtd.08.07.2021
1		Grid line F is also not correct. Not passing thru exact centre of column		Noted and revised the details.	Noted		
2		Pls add coordinate of this column corner also an show distances with respect to this corner		Noted and revised the details.	Coordinate given at crossing of Grid line not at corner. Please check how this coordinate will be checked after casting of column		Noted and corrected.
3		All Dimension for busduct to be shown.		Noted, however same shall be provided in separate document after approval of this drawing.	Ok noted. CGL to ensure manufacturing of busduct sections are correct and in line with layout		Noted.
4		Busduct compensator are too close to each other, pls check from installation and maintenance point of view		Noted, however, placement of busduct compensator is suitable for installation & maintenance point of view.	Noted		
5		Pls mark location of busduct support on Busduct layout		Noted and revised the details.	Noted		
6		Background should be First Floor plan instead of Ground floor plan. If First floor plan is used future bay will not be seen in conflict		Noted and revised the details.	Ok noted.		
7		Show centre line/ side line busbar distances from two side walls of GIS building		Noted and revised the details.	Noted		
8		Layout drawings is much better than last submission but still could not give CODE-D as first floor plan not used. All dimension are not cleraly shown and Arch drawings for sections not used.		Noted, however approval category-1 may please be given as comments are duly complied.	Approved subject to comments		Noted.
9		Legend for busduct part to be added		Noted and revised the details.	Noted		
10		Building dimension looks ok but Arch drg will be better		Noted and revised the details.	Noted		
11		Crane is not represented correctly		Indicative details of EOT crabe is shown with details of hook height from Floor leval and crane capacity. However, exact crane details shall be shown and provided by Crnae OEM.	BHEL to update Switchyard layout accordingly		Noted.
12		LA may have to be installed in GIS busduct near the transformer		As the GIS bays are directly connected to Transformer through Busduct without any Switches (DS/CB), given location is suffice the requiremenat.	Ok noted		
13		Use Architecture Drg section to be used as background. Grid lines to be shown in section also and distances to be shown from Grid line. Use of actual Arch drg section will ensure that there is no conflict.		Noted and revised the details.	Noted		
14		Kindly ask CG to reduce line thickness in drawings. Also text overlap to be avoided. Only GIS & busduct lines shall be kept dark & other drawing shall be in faint (colour-8)		Noted and revised the details.	Noted		
15		Busduct support calculation to be submitted		Noted, however thse details shall be provided in separate drawing, which shall be submitted after approval of this drawing.	Noted		
16					Ensure Phase sequence of GIS and Transformer is matching		Noted and revised.
17					In case busduct support foundation is in conflict, two foundations may have to be combined		Noted and shall be shown in drawing, to be submitted separately.
18					Mark Phase Sequence at GIS end		Noted and revised.
19					Arrow not clear		Noted and revised.

COMMENTS RESOLUTION SHEET for

DRAWING / DOCUMENT TITLE: 220KV GIS- Layout Plan & Section
DOCUMENT NUMBER: TB-411-316-079-03
REVISION NO: 02

Sl. No.	Drawing/ Document Reference Details	REV01			REV02		
		Consultant/ TCE Comment (s)/ Observation(s) dtd. 16.04.2021	Customer/ IOCL Comment (s)/ Observation(s) dtd. dtd.16.04.2021	Resolution(s)/ Clarification(s) by CGPISL dtd.28.05.2021	Consultant/ TCE Comment (s)/ Observation(s) dtd. 30.05.2021 & 04.06.2021	Customer/ IOCL Comment (s)/ Observation(s) dtd. dtd.16.04.2021	Resolution(s)/ Clarification(s) by CGPISL dtd.08.07.2021
20					CGL to submit foundation plan to enable BHEL to provide cutouts in First floor slab. And also details of insert plates to be provided.		Noted and shall be shown in drawing, to be submitted separately.
21					Based on Busduct layout finalisation and its support foundation,BHEL shall submit updated Switchyard foundation layout showing all foundations, BOT, Pipe route from Soakpit to BOT and ensure there is no conflict.		Noted and shall be shown in drawing, to be submitted separately.
22					CGL to submit foundation plan to show support arrangement, insert plate requirement and cutout requirements. BHEL to make provision accordingly. CGL to submit Earthing details. Separate drgs to be submitted		Noted and shall be shown in drawing, to be submitted separately.
23					Support should be on TOC		Support shall be fixed on floor level only as per M/s CGPISL Practice.
24					Ensure there is no conflict with power cables for spare bays. Cutouts and beam to be provided accordingly		Noted.
25					Ensure no conflict Grid incomer busduct with cutout/beam. Coordinate with BHEL.		As per GIS layout, necessary changes/ modifications shall be carried out in subsequent civil drawings.
26					Support on trench cover? BHEL-Civil to take care		Noted.

NOTE:
CONTRACTOR IS OBLIGED TO FURNISH THIS SHEET (DULY FILLED UP WITHRESOLUTION TO ALL CUSTOMER/ CONSULTANT COMMENTS ALONGWITH REVISED DRAWINGS